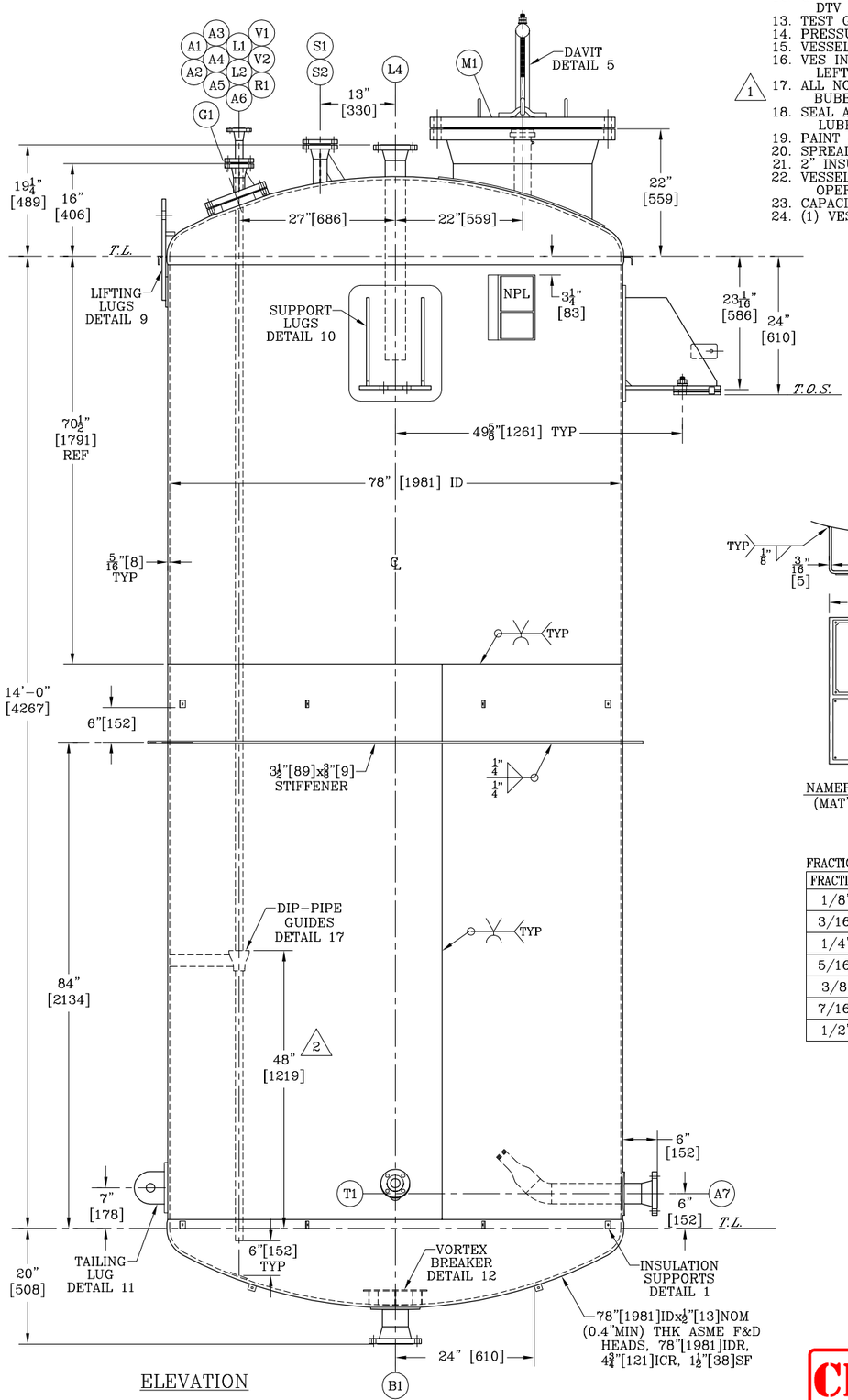

ELEVATION

PAINT, DISCOLORATION & GENERAL SHOP SOIL TO PROVIDE A MUTUALLY ACCEPTABLE WORKMANLIKE PRODUCT.

12. GASKET DIMENSIONS FOR CLASS 150# FLGS TO BE PER ANSI B16.5 TABLE E3. DTV TO SUPPLY (3) SPARE GASKET FOR MANWAY & ALL BLIND CONNECTIONS.
13. TEST GASKETS TO BE SAME DIMENSIONS & COMPRESSIBILITY AS SERVICE.
14. PRESSURE BOLTING SUPPLIED W/VESSEL TO BE USED FOR TESTING.
15. VESSEL EXT: PICKLE & PASSIVATE WELDS PER NOTE 8; ACID WASH REMAINDER.
16. VES INTERIOR: PICKLE & PASSIVATE PER STD TS 25-0205-2. ANY WATER LEFT AFTER HYDROTEST TO BE REMOVED BY BLOWING AIR OR SWABBING.
17. ALL NOZZLE REPADS TO HAVE 1/8" NPT WEEP HOLES @ LOW POINT; AIR-SOAP BUBBLE TEST @15 PSI. ALL OTHER EXT. PADS TO HAVE 1/4"ø VENT HOLES.
18. SEAL ALL MACH. FACES & THREADS W/PLASTIC PROTECTORS BEFORE SHIPPING. LUBRICATE ALL BOLT THREADS W/ANTI-SEIZE.
19. PAINT 45°,135°,225°& 315° ABOVE SUPPORT LUGS USING 4" TALL LETTERING.
20. SPREADER BAR REQUIRED WHEN LIFTING VESSEL; SHACKLE SIZE= 9 1/2 TON
21. 2" INSULATION REQ'D (BY OTHERS).
22. VESSEL WEIGHTS: EMPTY= 7,600 lbs; FLOODED (WATER)= 39,000 lbs; OPERATING= 32,200 lbs.
23. CAPACITY: 3,810 gals; HEADS= 209 gals; SHELL= 3,403 gal.
24. (1) VESSEL REQ'D.

1

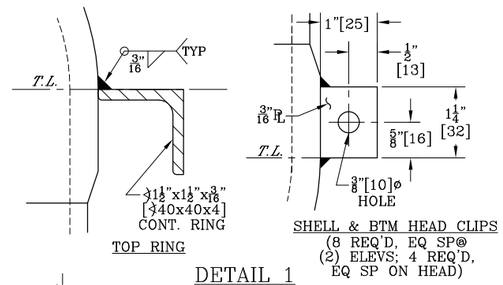

DETAIL 1
INSULATION SUPPORTS

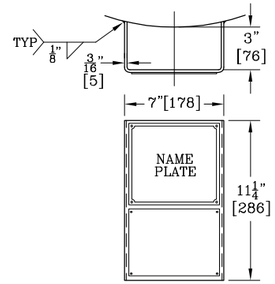

NAMEPLATE BRACKET
(MAT'L: 304 S/S)

FRACTION TO MILLIMETER CONVERSION

FRACTION	MM	FRACTION	MM
1/8"	[3]	9/16"	[14]
3/16"	[5]	5/8"	[16]
1/4"	[6]	11/16"	[17]
5/16"	[8]	3/4"	[19]
3/8"	[10]	13/16"	[21]
7/16"	[11]	7/8"	[22]
1/2"	[13]	15/16"	[24]

NOZZLE LOAD TABLE

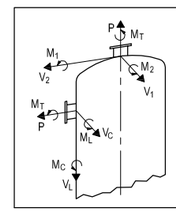

NOZ MARK	lbf			lbf ft		
	P	V_L V_1	V_C V_2	M_L M_1	M_C M_2	M_T
A7	787	922	674	1032	664	1328
B1	967	1079	787	1549	1033	1918
S1	517	697	517	369	295	590
S2	787	922	674	1032	664	1328

NOZZLE SCHEDULE

REPADS	MARK	SIZE	SCH	NO.	DESCRIPTION	SERVICE	DETAIL
	A1	1½"	40S	1	150# ANSI RFWN FLG	CRUDE ACA INLET DIP-PIPE	13
	A2	2"	40S	1	150# ANSI RFWN W/RED. RFSO FLG	MOUNT FOR A1	13
	A3	1"	40S	1	150# ANSI RFWN FLG	ACETIC ACID INLET DIP-PIPE	6
	A4	1½"	40S	1	150# ANSI RFWN W/RED. SO & GUSSETS	MOUNT FOR A3	2,6
	A5	1"	40S	1	150# ANSI RFWN FLG	LIQUID INLET DIP-PIPE	6
	A6	1½"	40S	1	150# ANSI RFWN W/RED. SO & GUSSETS	MOUNT FOR A5	2,6
7½"ODx5/16"THK	A7	3"	40S	1	150# ANSI RFWN FLG	IN TANK EDUCTOR INLET	16
8½"ODx5/16"THK	B1	4"	40S	1	150# ANSI RFWN FLG	PRODUCT OUTLET	12
	G1	6"	–	1	150# ANSI RF STUD PAD	SIGHT GLASS	8
	L1	3"	40S	1	150# ANSI RFWN FLG	LEVEL INDICATION STILLING WELL	7
	L2	4"	40S	1	150# ANSI RFWN FLG W/RED. SO FLG	MOUNT FOR L1	7
	L4	3"	40S	1	150# ANSI RFWN FLG	LEVEL SWITCH- HIGH	14
29 1/16"ODx5/16"THK	M1	24"	⅜"	1	150# ANSI RFWN FLG W/BF	MANWAY W/DAVIT	4,5
	R1	4"	40S	1	150# ANSI RFWN FLG	EMERGENCY PRESSURE RELIEF	3
	S1	2"	40S	1	150# ANSI RFWN FLG W/BF	SPARE	3
8"ODx5/16"THK	S2	3"	40S	1	150# ANSI RFWN FLG W/BF	SPARE	3
	T1	1½"	40S	1	150# ANSI RFWN FLG W/GUSSETS	TEMPERATURE INDICATION	15
	V1	1½"	40S	1	150# ANSI RFWN FLG W/GUSSETS	VAPOR EQUALIZATION	2
	V2	1"	40S	1	150# ANSI RFWN FLG W/GUSSETS	OFF GAS VENT	2

DESIGN DATA

1. DESIGN PRESS & TEMP: VESSEL- (-14.7) +45 PSIG @338°F [(-1.013) +3.1 BARG @170°C]
   OPERATING PRESS & TEMP: VESSEL- 1 PSIG @158°F [.06 BARG @-70°C]
2. CORROSION ALLOWANCE- NONE
3. SPECIFIC GRAVITY OF CONTENTS- 0.993 (61.98 lb/cf)
4. HYDROTEST- 60 PSIG [4.1 BARG] (USE WATER W/A CHLORIDE CONTENT <50 ppm).
5. FULL RADIOGRAPH REQ'D.
6. WIND LOAD- PER IBC 2009; 140 MPH, I=1.15, EXP C, 62 FT ELEVATION.
7. SEISMIC LOAD- PER IBC 2009; Ss=11%, S1=5.1%, I=1.5, CLASS D
8. VESSEL TO BE DESIGNED FOR LETHAL SERVICE.

MATERIAL

HEADS & SHELL- SA-240 316/316L
NOZ NECKS- SA-312 TP 316/316L (SMLS)
FLANGES- SA-182 F 316/316L
MANWAY NECK- SA-240 316/316L
SIGHT GLASS- SA-240 316/316L
FITTINGS- SA-403 WP 316/316L
REINF PADS- SA-240 316/316L
INTERNAL ATTACH- SA-240 316/316L
LIFT & TAIL LUGS- SA-240 304/304L
EXTERNAL ATTACH- SA-240 304/304L
SUPPORT LUGS- SA-240 304/304L
BOLTING- SA-193 B7/SA-194 2H (GALV)
GASKETS: VES- SP WD CGI 316/GRAPHITE
SIGHT GLASS- 1/8" GRAPHITE

WELDING PROCEDURES

No.	PROCESS	ROD	NOTES	No.	PROCESS	ROD	NOTES
8-8-2	(GTAW)	ER308L	304 to 304	8-8-4	(GMAW)	ER316L	316 ROOT ONLY
8-8-3	(FCAW)	ER308LT1-1	304 to 304	8-8-5	(SAW)	ER316L	316 to 316
8-8-4	(GMAW)	ER308L	304 ROOT ONLY	8-8-2	(GTAW)	ER316L	304 to 316
8-8-5	(SAW)	ER308L	304 to 304	8-8-3	(FCAW)	ER316LT1-1	304 to 316
8-8-2	(GTAW)	ER316L	316 to 316	8-8-4	(GMAW)	ER316L	304/316 ROOT ONLY
8-8-3	(FCAW)	ER316LT1-1	316 to 316	8-8-5	(SAW)	ER316L	304 to 316

CONSTRUCTION NOTES

1. VESSEL TO BE DESIGNED & CONSTRUCTED PER ASME CODE, SEC VIII, DIV 1, 2013 EDITION; ALSO PER SPECS LISTED BELOW.
2. ASME CODE STAMP & NATIONAL BOARD REGISTRATION REQ'D.
3. FLANGE FACE FINISH= 125AA
4. NOZZLE BOLT HOLES TO STRADDLE 0-180° CENTERLINE OR ITS PARALLEL.
5. INSIDE NOZZLE PROJECTION= 0, UNLESS NOTED OTHERWISE.
6. NOZZLE "B1" TO BE GROUND FLUSH.
7. SHELL & HEAD JOINTS TO BE FULL PENETRATION BUTT JOINTS; NOZZLE NECK TO SHELL OR HEAD JOINTS TO BE FULL PENETRATION.
8. ALL WELDS TO BE PASTED PER EC PT&E SPEC 25-0205, PARAGRAPH 5.2. PICKLING PASTE MATERIAL TO BE METINOX 71E OR EQUIVALENT.
9. HOLD FOR AUTH ASME & CUSTOMER INSPECTORS AT: a) FIT-UP & COMPLETION OF BACKGOUGING; b) FIT-UP OF MANWAY; c) HYDROTEST.
10. INTERNAL WELDS TO BE REASONABLY SMOOTH, BUT NOT NECESSARILY RIPPLE FREE OR GROUND SMOOTH.
11. INSIDE SURFACE OF COMPLETED VESSEL TO BE FREE OF RUST, SCALE, SLAG, GREASE. WELD FLUX, SPATTER, ARC BURNS, GOUGES, TOOL MARKS, OIL, INK, MILL MARKINGS,

CERTIFIED BY NB LATER

CAROLINA INTEGRATED SOLUTIONS
157 Derrick Rd, Spartanburg, SC 29303

U-L W RT-1

SERIAL NO. 293-03 YR BUILT 2015

SHELL				
MAWP	45	psi @	338	°F
MDMT	-20	°F @	45	psi
MAEWP	-14.7	psi @	338	°F
JACKET				
MAWP		psi @		°F
MDMT		°F @		psi

MAWP	3.1 BARG	PSIG @	170°C	°F
MDMT	-29°C	°F @	3.1 BARG	PSIG
MAEWP	-1.013 BARG	PSIG @	170°C	°F
JKT MAWP		PSIG @		°F
JKT MDMT		°F @		PSIG
INSPECTOR				
PLANT	MOBILE, ALABAMA			
WEIGHT	7,600 LBS			
MATERIAL	SA-240 316/316L			
P.O. No.	4700984380			
EQUIP No.	R-2210			
PROJ No.	4142-00940			

NAMEPLATE DETAIL

CERTIFIED

LETHAL SERVICE

REFERENCE:
CUST PO No: 4700984380
ITEM No: R-2210
PROJ No: 4142-00940
SPEC Nos: R-2210, REV 2; 20.230.013, REV 2; 20.230.030, REV 2; 20.230.036, R2; 20.230.032
CUST STDS: 25-0101-3; 25-0205-2; 25-0801-2; 25-0807; 25-0901; 25-0902; 25-0903; 25-0108; 25-0303

DTV REF DWGS: 15515-03-2, 15515-03-3

DESTINATION: THEODORE, AL

MARK	REVISION DESCRIPTION	BY	CK'D	DATE
2	ADD DIP-PIPE GUIDE ELEVS	RTC	BT	12-7-15
1	ADD CONSTRUCTION NOTE 17	RTC	BT	11-3-15
0	REV PER CUSTOMER APPROVAL	RTC	BT	7-7-15
A	REV PER CUSTOMER COMMENTS	RTC	BT	5-5-15

DOMINION
Tank & Vessel Company, Inc.
1501 Valley Road, Richmond, VA 23222

78"ID ACA AFTER REACTOR R-2210
EVONIK CORPORATION
MOBILE ALABAMA PLANT
ACA PROJECT

DRAWN RTC	2-10-15	1"=12"	JOB NO. 293-03	REV.
CHECKED BT	2-18-15		15515-03-1	2
CERTIFIED		SCALE		

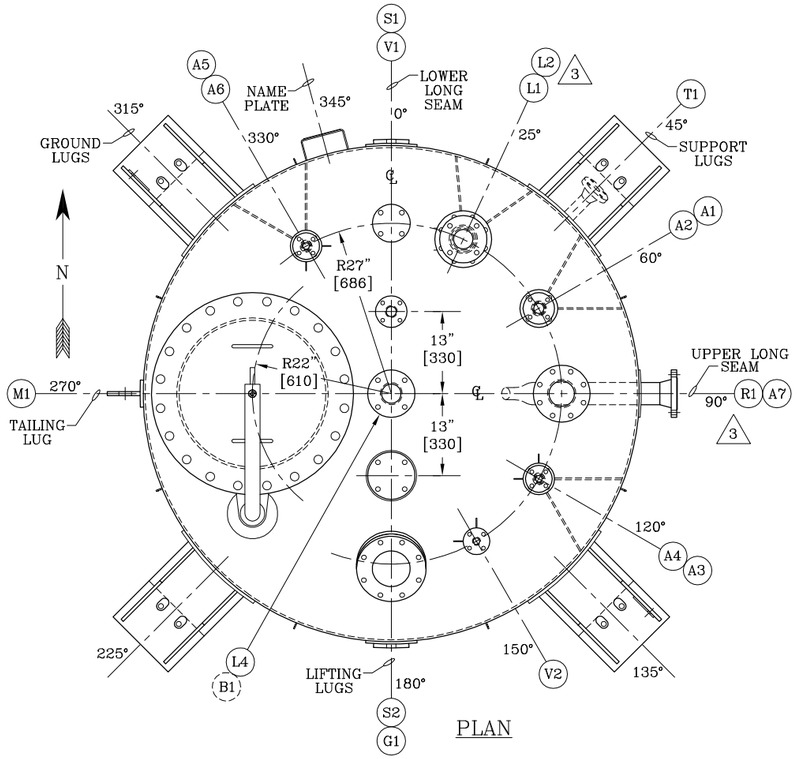

PLAN

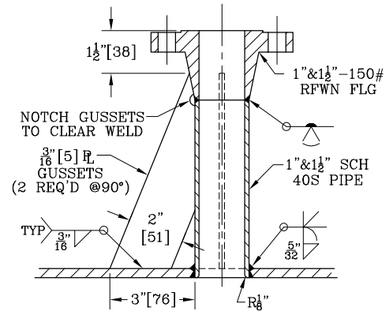

DETAIL 2
1"&1½"–150# NOZZLES W/GUSSETS

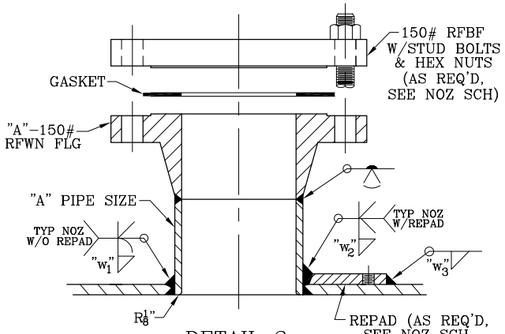

DETAIL 3
150# WELD NECK FLANGES
SEE TABLE 3 FOR DIMENSIONS.
SEE NOZZLE SCHEDULE FOR "A."

TABLE 3

NOM PIPE SIZE "A"	WELD SIZE "W1"	"W2"	"W3"	STUD BOLTS NO.	SIZE
2"	5/32"	–	–	4	5/8"–11UNC
3"	7/32"	1/4"	1/4"	4	5/8"–11UNC
4"	1/4"	–	–	8	5/8"–11UNC

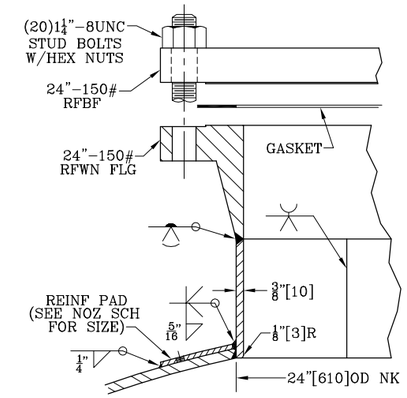

DETAIL 4
MANWAY

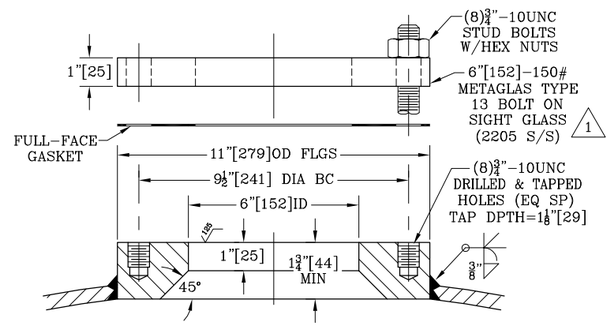

DETAIL 8
NOZZLE "G1"

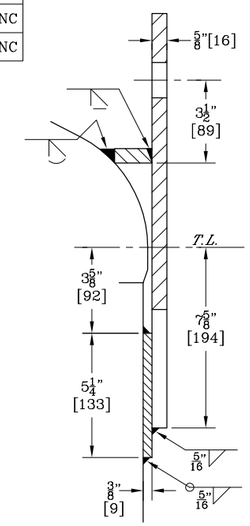

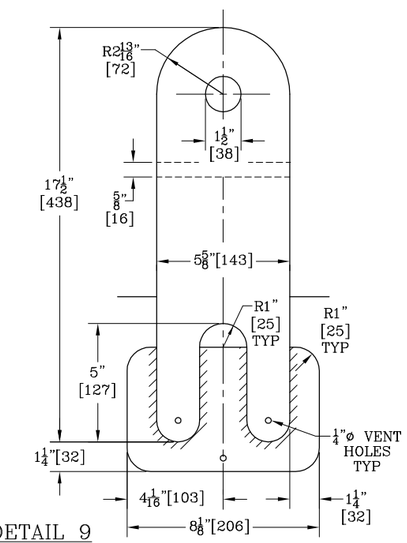

DETAIL 9
LIFTING LUGS
(2 REQ'D, EQ SP)
SEE PLAN FOR ORIENTATION

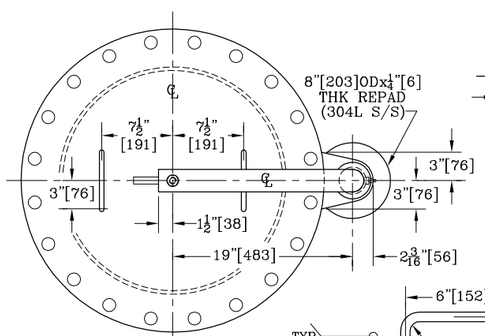

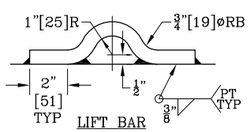

LIFT BAR

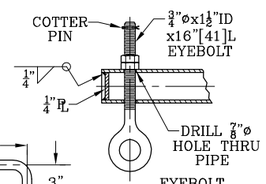

EYEBOLT

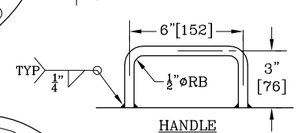

HANDLE
(2 REQ'D)

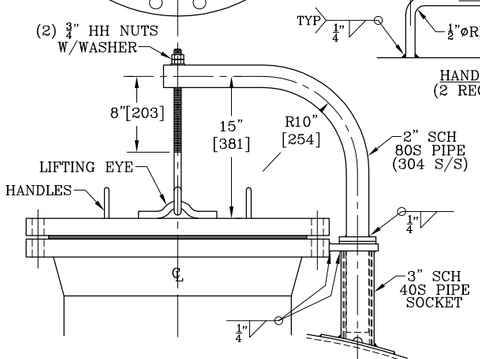

DETAIL 5
DAVIT FOR 24"–150# RFWN FLANGE
NOTES: ALL MAT'L TO BE S/S EXCEPT AS NOTED.
SEE PLAN FOR TRUE DAVIT ORIENTATION.

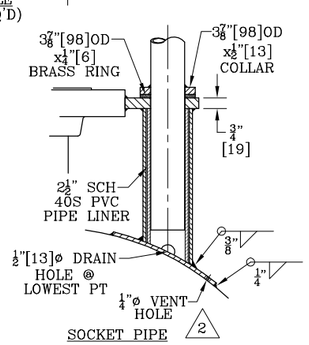

SOCKET PIPE

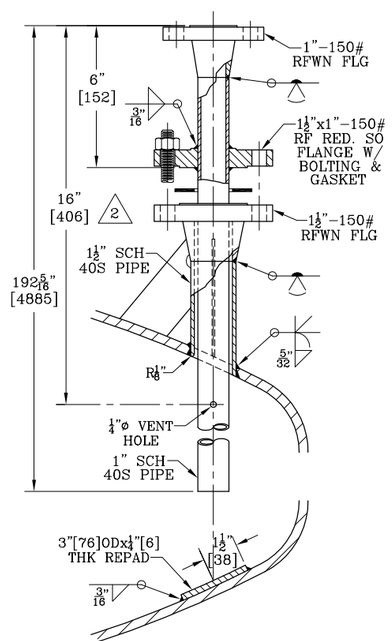

DETAIL 6
DIP–PIPES "A3&A5 ON A4&A6"
SEE DETAIL 2 FOR GUSSETS.
SEE DETAIL 17 FOR DIP–PIPE GUIDES.

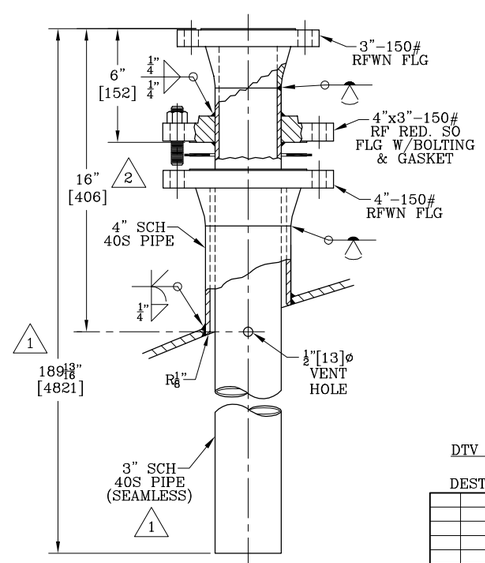

DETAIL 7
NOZZLE "L1 ON L2"
SEE DTL 17 FOR DIP–PIPE GUIDE.

FRACTION TO MILLIMETER CONVERSION

FRACTION	MM	FRACTION	MM
1/8"	[3]	9/16"	[14]
3/16"	[5]	5/8"	[16]
1/4"	[6]	11/16"	[17]
5/16"	[8]	3/4"	[19]
3/8"	[10]	13/16"	[21]
7/16"	[11]	7/8"	[22]
1/2"	[13]	15/16"	[24]

CERTIFIED

LETHAL SERVICE

DTV MAIN DWG: 15515–03–1

DESTINATION: THEODORE, AL

REFERENCE:
CUST PO No: 4700984380
ITEM No: R–2210
PROJ No: 4142–00940
SPEC Nos: R–2210, REV 2; 20.230.013, REV 2; 20.230.030, REV 2; 20.230.036, R1; 20.230.032
CUST STDS: 25–0101–3; 25–0205–2; 25–0801–2; 25–0807; 25–0901 thru 25–0903; 25–0108; 25–0303

MARK	REVISION DESCRIPTION	BY	CK'D	DATE
3	REORIENT R1,L1&L2	RTC	EW	12-17-15
2	ADD VENT HOLE LOCATIONS	RTC	BT	11-3-15
1	REV L1 LGTH; REMOVE HOLD DTL 8	RTC	BT	8-12-15
0	REV PER CUSTOMER APPROVAL	RTC	BT	7-9-15
A	REV PER CUSTOMER COMMENTS	RTC	BT	5-5-15

DOMINION
Tank & Vessel Company, Inc.
1501 Valley Road, Richmond, VA 23222

78"ID ACA AFTER REACTOR R–2210
EVONIK CORPORATION
MOBILE ALABAMA PLANT
ACA PROJECT

DRAWN RTC 2–10–15
CHECKED BT 2–18–15
CERTIFIED
SCALE
JOB NO. 293–03
15515–03–2
REV. 3

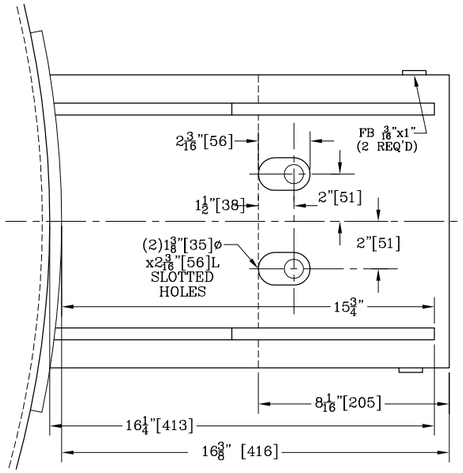

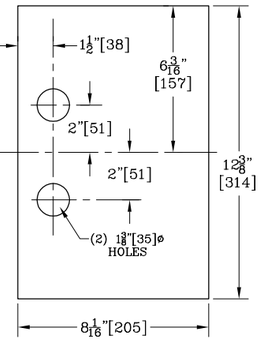

PLATE "A"
INSULATION PLATE
MATERIAL: 3/16"THK ARAMID
FIBER W/BINDER (NOVAPRESS)

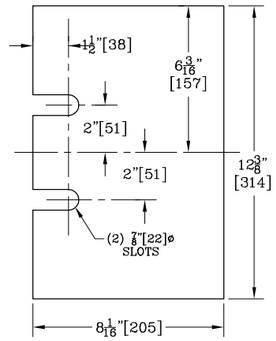

PLATES "B"
ADJUSTING PLATES
MATERIAL: 304 S/S

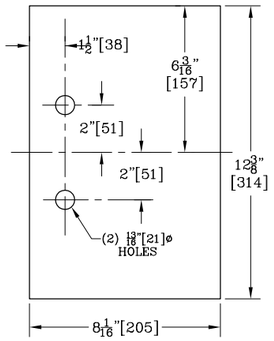

PLATE "C"
WELD PLATE
MATERIAL: 304 S/S 1

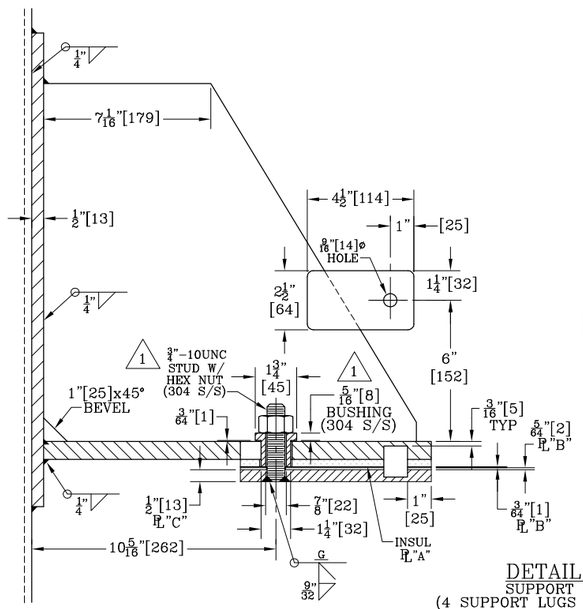

DETAIL 10
SUPPORT LUGS
(4 SUPPORT LUGS REQ'D, EQ SP)
(2) S/S GROUND CLIPS REQ'D, EQ SP.
SEE ELEV & PLAN FOR LOCATION.

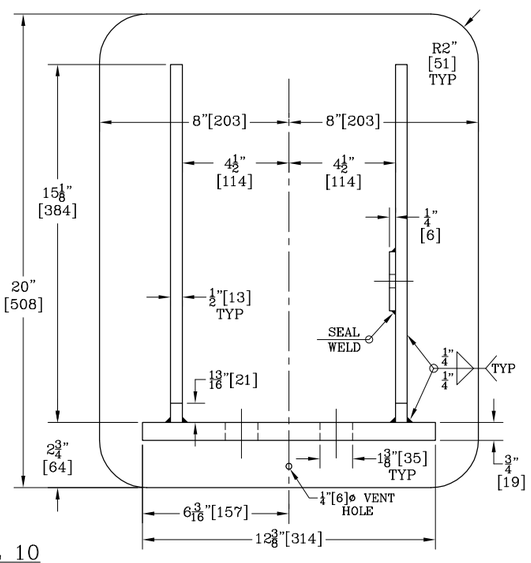

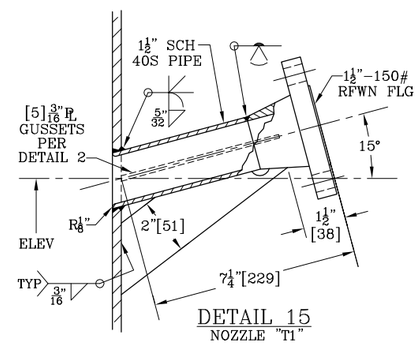

DETAIL 15
NOZZLE "T1"

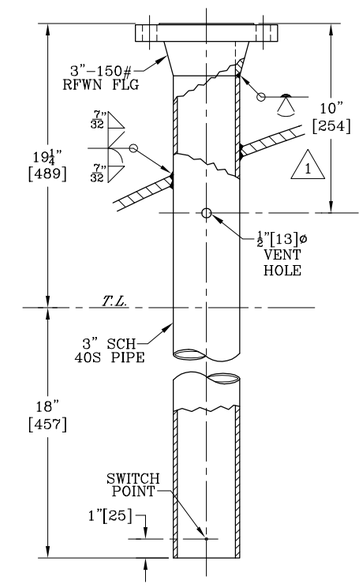

DETAIL 14
NOZZLE "L4"

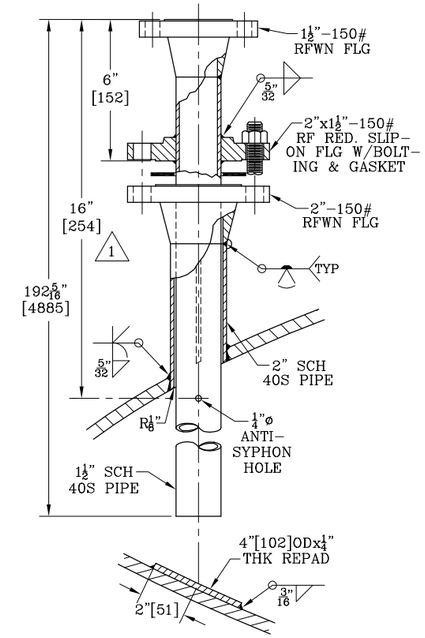

DETAIL 13
DIP-PIPE "A1 ON A2"

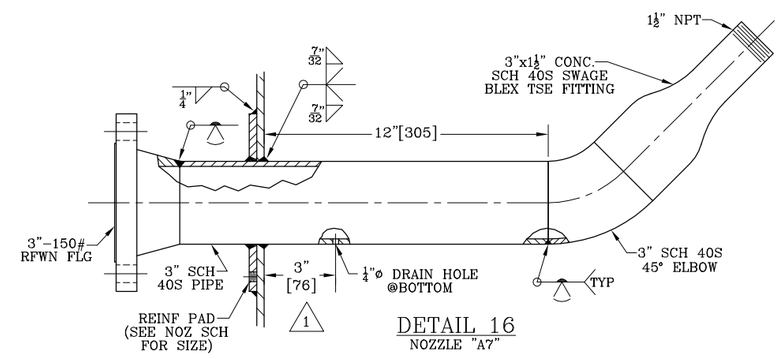

DETAIL 16
NOZZLE "A7"

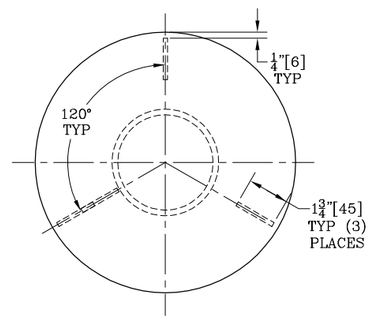

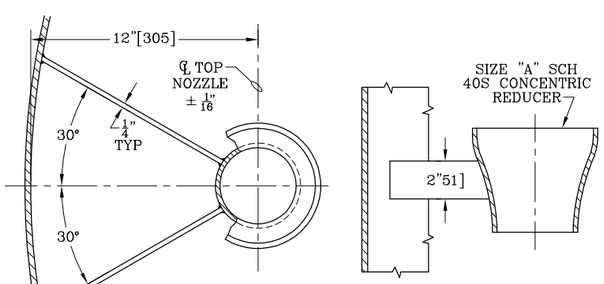

DETAIL 17
DIP-PIPE SUPPORT BRACKETS
(1 REQ'D FOR EACH DIP-PIPE)
SEE TABLE 17 FOR SIZES.
SEE ELEV FOR LOCATION.

TABLE 17

DIP-PIPE MARK	REDUCER SIZE "A"
A3,A5	3"x1 1/2"
A1	4"x2"
L1	6"x4"

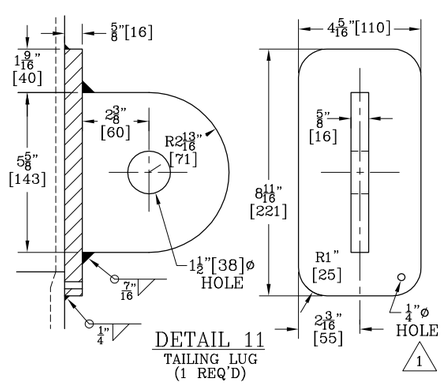

DETAIL 11
TAILING LUG
(1 REQ'D)

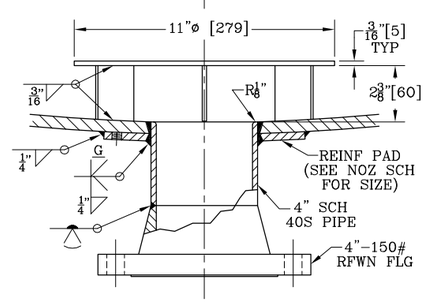

DETAIL 12
VORTEX BREAKER
@NOZZLE "B1"

FRACTION TO MILLIMETER CONVERSION

FRACTION	MM	FRACTION	MM
1/8"	[3]	9/16"	[14]
3/16"	[5]	5/8"	[16]
1/4"	[6]	11/16"	[17]
5/16"	[8]	3/4"	[19]
3/8"	[10]	13/16"	[21]
7/16"	[11]	7/8"	[22]
1/2"	[13]	15/16"	[24]

CERTIFIED

LETHAL SERVICE

DTV MAIN DWG: 15515-03-1

DESTINATION: THEODORE, AL

REFERENCE:
CUST PO No: 4700984380
ITEM No: R-2210
PROJ No: 4142-00940
SPEC Nos: R-2210, REV 2; 20.230.013, REV 2; 20.230.030, REV 2; 20.230.036, R1; 20.230.032
CUST STDS: 25-0101-3; 25-0205-2; 25-0801-2; 25-0807; 25-0901 thru 25-0903; 25-0108; 25-0303

MARK	REVISION DESCRIPTION	BY	CK'D	DATE
1	ADD VENT HOLE LOCATIONS; REV MATERIAL DTL 10	RTC	BT	11-3-15
0	REV PER CUSTOMER APPROVAL	RTC	BT	7-9-15
A	REV PER CUSTOMER COMMENTS	RTC	BT	5-5-15

DOMINION
Tank & Vessel Company, Inc.
1501 Valley Road, Richmond, VA 23222

78"ID ACA AFTER REACTOR R-2210
EVONIK CORPORATION
MOBILE ALABAMA PLANT
ACA PROJECT

DRAWN RTC 2-10-15
CHECKED BT 2-18-15
CERTIFIED
SCALE
JOB NO. 293-03
15515-03-3
REV. 1