PART NAME PART CODE	PART NO.	MTLS/NO.	DESCRIPTION	MATERIALS	SIZE	Q'TY /SET	SPARE	WEIGHT (KG)	REMARK
EA	011	1	DAVIT PIPE	SA312-TP304L	3" SCH.160 x L2209	1		48	
EA	011	2	COLLAR	SA240-304L	t25 x I.D92 x O.D125	1		1	
EA	011	3	END PLATE	SA240-304L	t6 x ø80	1		1	
EA	011	4	STIFFNER	SA312-TP304L	2" SCH.80 x L642	1		5	
EA	011	5	SLEEVE PIPE	SA312-TP304L	4" SCH.120 x L262	1		8	
EA	011	6	BRACKET	SA240-304L	t25 x 170 x 918	1		33	
EA	011	7	END PLATE	SA240-304L	t6 x ø106	1		1	
EA	011	8	EYE BOLT/2NUTS	SA36/SA194-2H	1"xBUNC x L320	1SET		2	
EA	011	9	WASHER	SA36	t4.5 x I.D26 x O.D44	1		1	
EA	011	10	HOOK	SA479-304L	R.B25 x 270	1		2	
EA	011	11	HALF COUPLING	304 S.S	1/8" ASME 3000#	1		–	
EA	011	12	GREASE FITTING	304 S.S	NPT 1/8"	1		–	
TOTAL WEIGHT						102		KG	

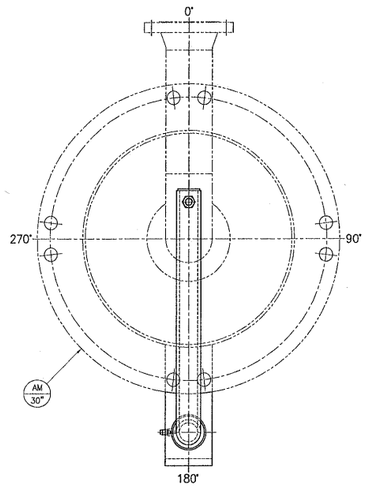

PLAN VIEW
(ROTATED 180° FOR ITEM NO. DR1080 DAVIT)

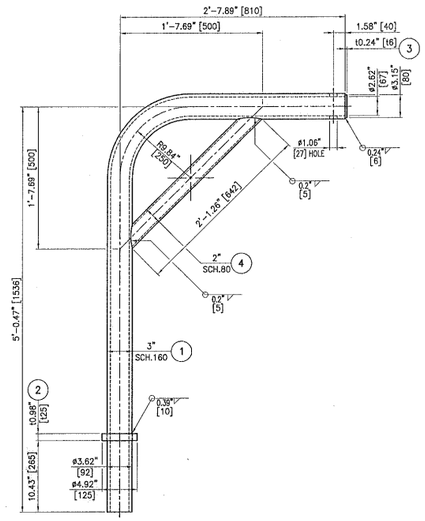

DAVIT PIPE DETAIL

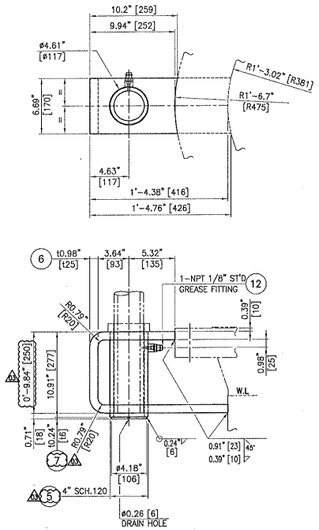

DETAIL "A"

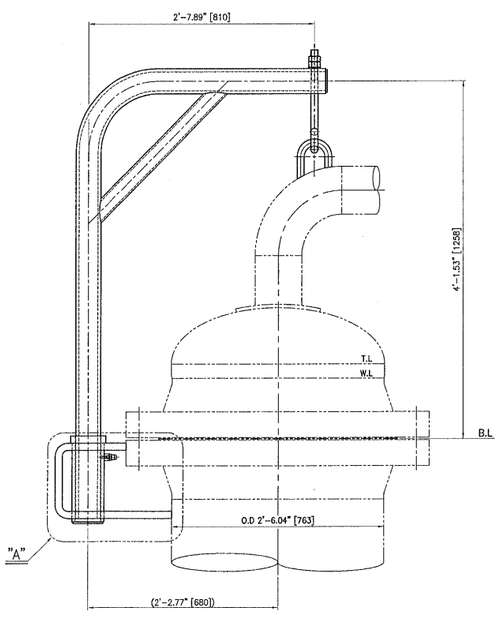

DAVIT VIEW

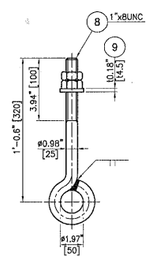

(8) (9) EYE BOLT/2NUTS, W/WASHER

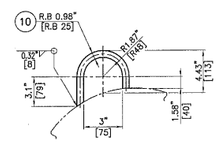

HOOK DETAIL

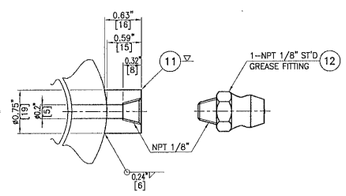

GREASE FITTING DETAIL
(AT : 270°)

FOR APPROVAL
2012.03.23
SUNG JIN GEOTEC CO., LTD.

KBR
ACCEPTANCE FOR ENGINEERING USE
THIS DOCUMENT IS:
ACCEPTED (Code 1) X
ACCEPTED WITH COMMENTS (Code 2)
NOT ACCEPTED (Code 3)
NOT REVIEWED (Code 4)
ACCEPTANCE DOES NOT RELIEVE SUPPLIER FROM FURNISHING MATERIAL IN CONFORMANCE WITH ORDER. REFER TO SOR-1 FOR FULL DEFINITION OF ACCEPTANCE CONDITIONS.
DISCIPLINE VM BY OWL
DATE 19-Jul-12

ASME CODE STAMPED WORK (U)

REV.	DATE	DESCRIPTION	DRWN	CHKD.	APPD.
03	23. Mar. '12	AS-BUILT	B.M ENG	~~J.K KIM~~	~~H.C JUNG~~
02	01. Sep. '11	REVISED AS COMMENTS	B.M ENG	D.H HYUN	H.C JUNG
01	11. Jun. '11	REVISED AS COMMENTS	B.M ENG	J.K KIM	H.C JUNG
00	27. Apr. '11	ISSUED FOR APPROVAL	B.M ENG	J.K KIM	H.C JUNG

PROJECT:
Kemper County IGCC Project

KBR
Engineering services by KBR Technical Services
TBPE Reg. No. F-2397

SOUTHERN COMPANY
Southern Company. Inc.

SUNGJIN POSCO Family
SUNGJIN GEOTEC CO., LTD
ULSAN, KOREA

TITLE:
DR1080/2080
AGR FLASH GAS COMPRESSOR KO DRUM
MANWAY DAVIT DETAIL

ANGLE 3	SCALE	REQ'D NO.	P.O. NO.:	MPC17984-0001	SHEET NO.
	N/S	2 SETS			1 OF 1
		PLANT: Kemper County	SGT DWG. NO.	SGT11-SP11-DR1080/2080-011	SGT W/O NO. 11SP11
B1	DRAWING NO. MM79037				REV. 03

SGT JOB NO. : 11-SP-11

Southern Company Generation Kemper County
MM79037 C Unit 1

SUNGJIN GEOTECH PO: MPC17984-0001
SGT11-SP11-DR1080-2080-011 Rev: 3
IGCC - GASIFIER - AGR FLASH GAS COMPRESSOR KO DRUM - MANWAY DAVIT