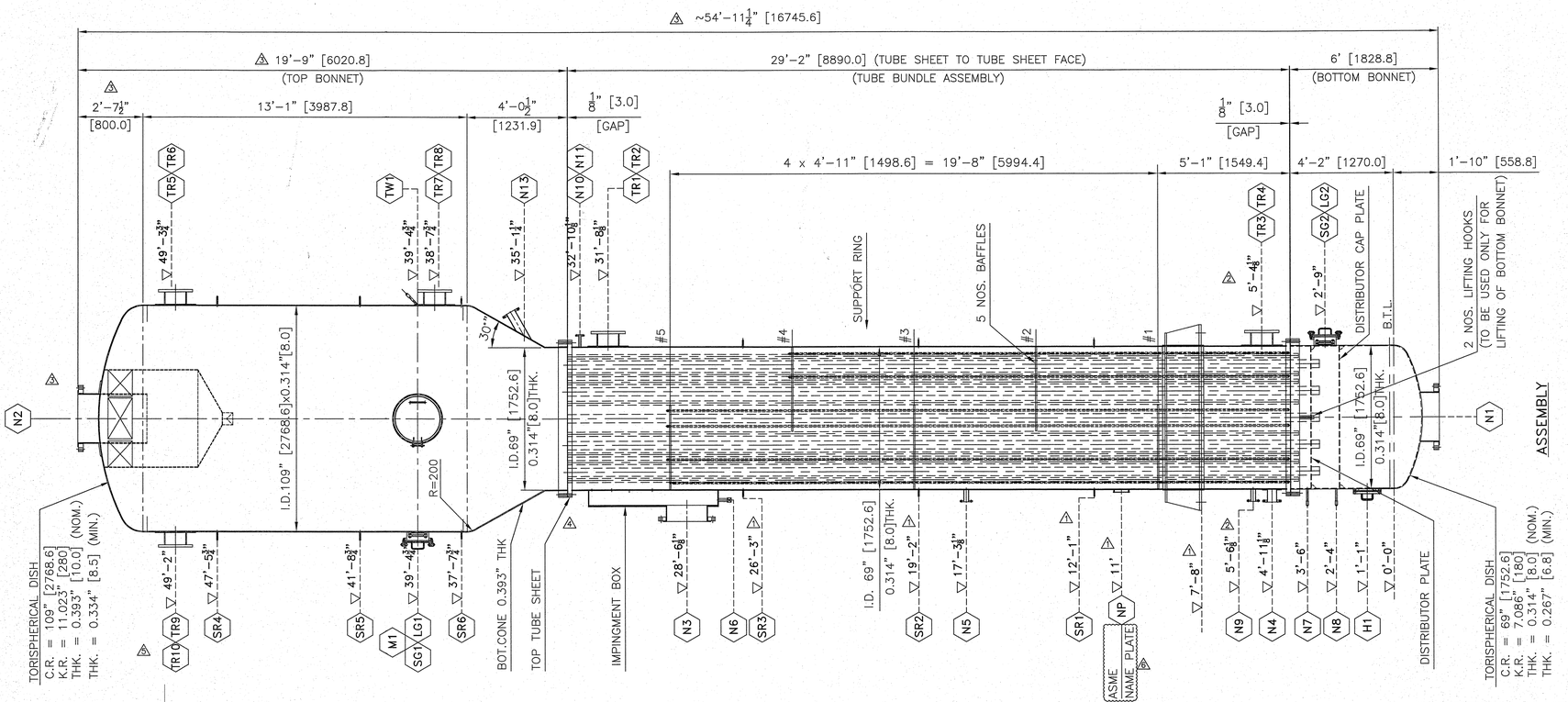


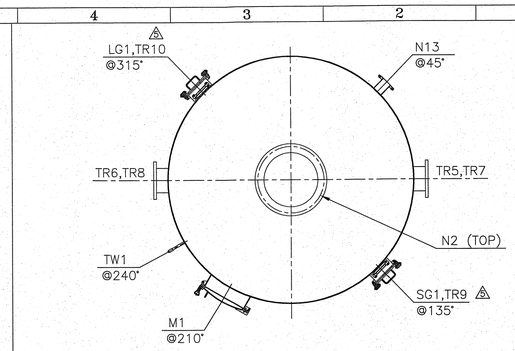


⚠ NOZZLE ORIENTATION FOR TOP BONNET (VIEW FROM TOP)

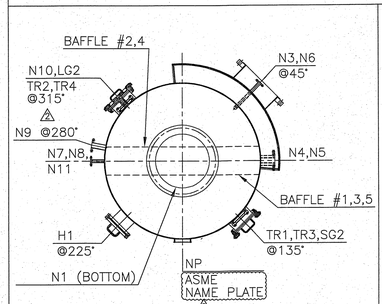


⚠ TUBE BUNDLE ASSLY. SHELL & BOTTOM BONNET

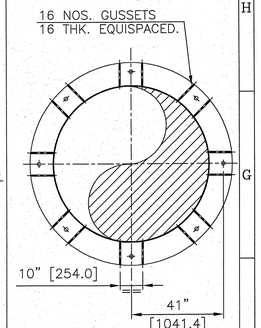


SUPPORT RING

| NOZZLE NO. | SIZE NPS | SCH./ THK. | TYPE | RATING | PROJ. FROM CENTER LINE | SERVICE |
|---|---|---|---|---|---|---|
| | | | END FLG.CONN. ASME B-16.5 | | | |
| N1 | 24 | 0.314" | SOFF | 150# | SEE DWG. | RECIRCULATION IN |
| N2 | 24 | 0.393" | SOFF | 150# | SEE DWG. | RECIRCULATION OUT |
| N3 | 20 | 0.314" | SOFF | 150# | 4'-2" | STEAM IN |
| N4 | 4 | SCH.40 | SORF | 150# | 3'-5" | CONDENSATE OUT |
| N5 | 2 | SCH.80 | SORF | 150# | 3'-5" | EQUALIZATION IN |
| N6 | 1 NPT(F) | SOCKET WITH PLUG | | 3000# | SEE DETAILS | SPARE WITH B/F AT STEAM INLET |
| N7 | 1/2 NPT(F) | SOCKET WITH PLUG | | 3000# | 3'-4" | SPARE WITH SOCKET PLUG |
| N8 | 1/2 NPT(F) | SOCKET WITH PLUG | | 3000# | 3'-4" | SPARE WITH SOCKET PLUG |
| N9 | 2 | SCH.80 | SORF | 150# | 3'-5" | SHELL SIDE VENT |
| N10 | 1 | SCH.80 | SORF | 150# | 3'-5" | SHELL SIDE VENT |
| N11 | 1 | SCH.80 | SORF | 150# | 3'-5" | SPARE WITH B/F |
| N12 | VOID | – | – | – | – | – |
| TW1 | 1/2 NPT(F) | SOCKET WITH PLUG | | 3000# | SEE DWG. | THERMOWELL |
| N13 | 4 | SCH.40 | SORF | 150# | SEE DWG. | CONDENSATE OUT |
| TR5–10 | 10 | SCH.80 | –– | | 5'-1" | TRUNNION (TOP BONNET) |
| TR1–4 | 10 | SCH.80 | –– | | 3'-5" | TRUNNION (MAIN SHELL) |
| H1 | 8 | AS PER DETAILS | | | SEE DWG. | HANDHOLE |
| M1 | ID 23.62 in | AS PER DWG. | | | SEE DWG. | MANHOLE |
| SG1/LG1 | ID 4.92 in. | AS PER DWG. | | | SEE DWG. | SIGHT GLASS/LIGHT GLASS |
| SG2/LG2 | ID 4.92 in. | AS PER DWG. | | | SEE DWG. | SIGHT GLASS/LIGHT GLASS |
| EP | –– ⚠ | AS PER DETAILS | | | –– | EARTHING PLATE |
| NP | –– | AS PER DETAILS | | | –– | NAME PLATE (ASME) |

NOZZLE SCHEDULE

14) ALL WELD OVERLAYS SHALL BE EXAMINED BY PENETRANT TEST AFTER MACHINING.
13) PROPER CARE SHOULD BE TAKEN BY SHOP TO PROTECT THREADING OF NIPPLE OR SOCKET.
12) INSIDE EDGES OF TUBE SHEET & BAFFLES SHALL BE CAREFULLY DEBURRED TO AVOID DAMAGE TO TUBES.
11) NOZZLE N1,N2 LARGE OPENING IN VESSLE SHALL BE FABRICATED AS PER RECOMMENDATIONS OF APPENDIX 1-7(c) OF ASME SEC. VIII DIV I AND WELDS SHALL BE GROUND TO CONCAVE CONTOUR & INSIDE CORNER OF OPENING ROUNDED TO GENEROUS RADIUS TO REDUCE STRESS CONCENTRATION & SHALL BE LIQUID PENETRANT TESTED.
10) ALL INSIDE WELDS TO BE FLUSHED AND OUTSIDE WELD JOINTS TO BE GROUND SMOOTH.
9) BOLTING DIMENSIONS OF NOZZLE FLANGES UPTO NPS 24 SHALL BE AS PER ASME B16.5–2003 AND FOR NPS 26 & ABOVE ARE AS PER ASME B16.47–1996, #150, SERIES A, ALSO HALF COUPLINGS WITH PLUG SHALL BE AS PER ASME B16.11–2001.
8) GASKET SEATING SURFACE OF TUBESHEET & FLANGE SHALL HAVE SERRATED CONCENTRIC FINISH OF 125 TO 250 MICRO INCH AND AVERAGE CONCENTRIC SERRATIONS 44 TO 55 PER INCH AS PER ASME B16.5–6.4.4.3. MATERIAL TEST REPORTS ARE REQUIRED FOR ALL PRESSURE PARTS.
7) ALL MATERIALS SHALL CONFORM TO ASME SEC.II PART A EDITION 2004 ADDENDA 06.
6) EQUIPMENT IS FOR NON–LETHAL SERVICE. CYCLIC LOADING/IMPACT SHOCK LOADING ARE NOT APPLICABLE.
5) STAINLESS STEEL MATERIAL IS EXEMPTED FROM IMPACT TESTING AS PER UHA–51(d) & UHA–51(e) FOR THE REQUIRED MINIMUM DESIGEN METAL TEMPARATURE, BUT FLANGES OF SA 516 GR.70 (NORMALIZED) OVER 5" (127 mm) THK. SHALL BE IMPACT TESTED AT MDMT.
4) PWHT IS NOT REQUIRED FOR COMPLETE EQUIPMENT, EXEMPTED AS PER UHA–32. IF CARBON STEEL FLANGES OVER 38 mm THK. ARE WELDED IN SEGMENTS THEN PWHT SHALL BE CARRIED OUT AFTER COMPLETE WELDING OF FLANGES ONLY.
3) ALL BOLT HOLES TO STRADDLE WITH PRINCIPLE CENTER LINE.
2) NOZZLE PROJECTIONS ARE MEASURED FROM CENTER LINE OF EQUIPMENT OR FIXED REFERENCE LINE UPTO THE GASKET SEATING SURFACE.
1) ALL DIMENSIONS ARE IN US CUSTOMERY UNITS & THOSE IN BRACKET ARE IN "mm" UNLESS OTHERWISE SPECIFIED.

GENERAL NOTES

| | | | | |
|---|---|---|---|---|
| DESIGN CODE : ASME SEC.VIII DIV.1, EDITION 2004 UPTO & INCLUDING ADDENDA 2006 ('U' STAMP & NATIONAL BOARD REGISTRATION IS REQD.) | | | | |
| DESCRIPTION | | UNITS | SHELL SIDE | TUBE SIDE |
| MAWP AT DESIGN TEMPERATURE | | psi(g) / [MPa(g)] | 16 / [0.110] | 40 / [0.275] |
| EXTERNAL MAP AT DESIGN TEMP. | | psi(g) / [MPa(g)] | N.A. | 15 / [0.1] |
| DESIGN TEMPERATURE | | °F / [°C] | 266 / [130] | 230 / [110] |
| MDMT AT MAWP | | °F / [°C] | 32 / [0] | 32 / [0] |
| MEAN METAL TEMPERATURE | | °F / [°C] | REFER TABLE NO.1 | |
| HYDRO TEST PRESSURE (VERTICAL) | | psi(g) / [kg/cm²(g)] | 22.75 / [1.6] | 54.05 / [3.8] |
| HYDRO TEST PRESSURE (HORIZONTAL) | | psi(g) / [kg/cm²(g)] | 35.56 / [2.5] | 79.65 / [5.6] ⚠ |
| TEST FLUID | | | WATER (REFER NOTE 18 & 21) ⚠ | |
| CORROSION ALLOWANCE | | inch / [mm] | NIL | NIL |
| NDT | DPT/LPT | | AS PER PRAJ QA PLAN | |
| | RADIOGRAPHY (REF. NOTE 26) | SHELL/HEAD | SPOT / –– | SPOT / FULL |
| JOINT EFFICIENCY | | SHELL/HEAD | 0.85 / –– | 0.85 / 1.00 |
| PROCESS FLUID | | | STEAM | VINASSE LIQUID |
| PROCESS FLUID DENSITY | | lb/ft³ / [kg/m³] | 59.54 / [953.73] | 66.24 / [1061.06] |
| HEAT TRANSFER AREA | | ft² / [m²] | 6727 / [624.95] | |
| NUMBER OF PASS | | | ONE | ONE |
| NUMBER OF TUBES | | | 458 | |
| TUBE SIZE | O.D.x THK. | inch / [mm] | 2" x 0.079" / [50.8 x 2.0] | |
| | LENGTH | inch / [mm] | 354" / [8991.6] | |
| TUBE PITCH | | inch / [mm] | 2.5" / [63.5] | |
| DOWNCOMER | O.D.x THK. | inch / [mm] | 4" x 0.079" / [101.6 x 2.0] | |
| | LENGTH | ft–in / [mm] | 364" / [9245.6] | |
| HEAT TREATMENT/PWHT | | | REFER NOTE 4 | |
| IMPACT TESTING | | | REFER NOTE 5 | |
| WIND | IMPORTANCE FACTOR | | 1.0 | |
| | EXPOSURE CONSTANT | | EXPOSURE – 'C' | |
| | SPEED | mph / [kmph] | 150 / [241.4] | |
| | DESIGN CODE | | IBC–2006 | |
| SEISMIC | IMPORTANCE FACTOR | | 1.0 | |
| | SITE CLASS | | 'D' ⚠ | |
| | ACC. BASED FACTOR (Fv) | | 2.0 | |
| | ACC. BASED FACTOR (Fa) | | 1.6 ⚠ | |
| | DESIGN CODE | | IBC–2006 | |
| INSULATION | THICKNESS | inch / [mm] | 3" / [76.2] | 3" / [76.2] |
| | TYPE | | HOT / COLD | HOT / HOT |
| PAINTING | | | REFER PAINTING SPECIFICATIONS | |

WEIGHTS

| | | |
|---|---|---|
| EMPTY WEIGHT (WITHOUT WIRE BITS) | lbm / [kg] | 61,730 / 28,000 ⚠ |
| FULL OF WATER WEIGHT | lbm / [kg] | 2,53,530 / 1,15,000 |

GENERAL NOTES (COTN.)

20) CARBON STEEL BLIND FLANGES ALONG WITH RING GASKET (1/8" THK.) TO BE USED DURING HYDROTEST.
19) HYDROSTATIC TEST AT SHOP SHALL BE CARRIED OUT IN HORIZONTAL POSITION.
18) MINIMUM METAL TEMP. OF EQUIPMENT DURING HYDROTEST SHALL BE MAINTAINED BETWEEN 62°F TO 104°F
17) R.F. PAD VENT HOLES SHALL BE PNEUMATICALLY TESTED @15 psi (g) & CHECKED WITH SOAP SOLUTION.
16) ATTACHMENT WELDS OF ANY PERMANENT ATTACHMENT TO SHELL/DISH SHALL BE PENETRANT TESTED.
15) THE ROOT & FINAL PASS OF ALL CLOSING SEAMS OR INACCESSIBLE BUTT WELDS SHALL BE PENETRANT TESTED.

DESIGN DATA

26) WELD JOINTS OF BODY FLANGES/NOZZLE FLANGES (OVER NPS 24) & TUBE SHEETS MADE IN SEGMENTS SHALL BE FULLY RADIOGRAPHED TO MEET UW–11 REQUIREMENTS.
25) NOZZLE UPTO NPS 3 SHALL BE PROVIDED 2 Nos. GUSSET OF SIZE 1" W x 0.118" THK. AT 90° APART.
24) ALL STAINLESS STEEL PARTS SHALL BE PICKLED & PASSIVATED AS PER SPECIFICATIONS (MFG–P–219) AND CARBON STEEL PARTS SHALL BE SAND BLAST CLEANED TO OF SA 2 1/2 & PAINTED WITH MINIMUM ONE COAT OF EPOXY PRIMER & TWO COATES OF EPOXY FINAL PAINT.
23) AFTER HYDROTEST EQUIPMENT SHALL BE DRIED THOROUGHLY.
22) ALL NOZZLE FLANGES SHALL BE CLOSED WITH 3 mm THK. NACF GASKET & 1.6 mm THK. AISI 304 SHEET, DULY TIED WITH Ø1.6 AISI 304 WIRE TO AVOID ENTRY OF FOREIGN MATERIALS DURING TRANSPORTATION/STORAGE.
21) CHLORIDE CONTENT OF WATER USED FOR HYDROTEST SHALL NOT EXCEED 25 PPM.

| | |
|---|---|
| NAME PLATE | AISI 304 |
| INSULATION CLADDING | SS 304 |
| C TYPE GASKET | EPDM |
| WIRE BITS | AISI 304 |
| IMPINGEMENT BOX | SA 240 TYPE 316 |
| DISTRIBUTOR CAP | SA 240 TYPE 316 |
| DISTRIBUTOR CAP PLATE | SA 240 TYPE 316 |
| DISTRIBUTOR PLATE | SA 240 TYPE 316 |
| STIFFENER | SA 240 TYPE 316 |
| REINFORCEMENT PAD | SA 240 TYPE 316 |
| SUPPORT PLATE | IS 2062 GR.B / SA 516 Gr.70 / SA 36 |
| SUPPORT PAD PLATE | SA 240 TYPE 316 |
| STUD/NUTS/WASHER (EXT.) (FOR BODY FLANGES & NOZZLE FLANGES FROM NPS 26 & ABOVE) | SA193 Gr.B7 & SA194 Gr.2H (GREEN PASSIVATED) |
| BOLT/NUTS/WASHER (EXT.) (FOR NOZZLE FLANGES FROM NPS 8 TO NPS 24) | SA193 Gr.B7 & SA194 Gr.2H (GREEN PASSIVATED) |
| BOLT/NUTS/WASHER (EXT.) (FOR NOZZLE FLANGES UPTO NPS 6) | SA193 Gr.B8 & SA194 Gr.8 |
| GASKET | NACF (AF#154) |
| NOZZLE FLANGE (FROM NPS 26 & ABOVE) | SA 516 GR.70 /SA 266 GR.2 (NORMALIZED) (WITH SS316 WELD OVERLAY) |
| NOZZLE FLANGE (NPS 8 TO NPS 24) | SA 105 (SS316 WELD OVERLAY) |
| NOZZLE FLANGE (UPTO NPS 6) | SA 182 F 316 |
| NOZZLE PIPE (NPS 14 & ABOVE) | SA 240 TYPE 316 |
| NOZZLE PIPE (UPTO NPS 12) | SA 312 TP316 (WELDED) |
| BOLT/NUTS (INT.) | AISI 316 |
| SPACER TUBE | AISI 316 |
| TIE ROD | AISI 316 |
| BAFFLE | SA 240 TYPE 316 |
| CHANNEL FLANGE | SA 516 Gr.70/SA 266 Gr.2 (NORMALIZED) (WITH SS316 WELD OVERLAY) |
| DISHEND | SA 240 TYPE 316 |
| TUBE SHEET | SA 240 TYPE 316 / SA 182 F 316 |
| TUBE | SA 249 TP 316 |
| CHANNEL SHELL | SA 240 TYPE 316 |
| SHELL | SA 240 TYPE 316 |

MATERIAL OF CONSTRUCTION

| SR.NO | DESCRIPTION | MATERIAL | SIZE |
|---|---|---|---|
| 20 | | | |
| 19 | NOZZLE FLANGE DETAILS (ABOVE DN600) | 06D058–4–WFD453 | |
| 18 | RECOMMENDED TORQUE VALUES FOR BOLT/STUDS | STD–4–M–2801 | |
| 17 | NOZZLE LOAD DATA | 06D058–NLD–401 | |
| 16 | WELD PLAN | 06D058–3–WEL438 | |
| 15 | DESIGN CALCULATIONS | 06D058–CAL–H1502A/B | |
| 14 | SIGHT GLASS/LIGHT GLASS WITH COVER (5") | 06D058–3–WFD492 ⚠ | |
| 13 | HANDHOLE | 06D058–3–WFD499 | |
| 12 | MANHOLE (24" SS316) | 06D058–2–WFD491 | |
| 11 | PICKLING & PASSIVATION FOR (SS) | MFG–P–219 | |
| 10 | FABRICATION TOLERANCES | 06D058–FABTOL–401 | |
| 09 | VOID | –– ⚠ | |
| 08 | DETAILS OF ASME NAME PLATE | 06D058–3–NPD438 | |
| 07 | NOZZLE DETAILS | 06D058–1–WFD498 | |
| 06 | FABRICATION DETAILS FOR DISTRIBUTOR CAP PLATE | 06D058–2–WFD497 | |
| 05 | FABRICATION DETAILS FOR DISTRIBUTOR PLATE | 06D058–2–WFD496 | |
| 04 | FABRICATION DETAILS FOR BOTTOM BONNET | 06D058–1–WFD495 | |
| 03 | TUBESHEET & BAFFLE DETAILS | 06D058–2–TSL438 | |
| 02 | FABRICATION DETAILS FOR TUBE BUNDLE | 06D058–1–WFD494 | |
| 01 | FABRICATION DETAILS FOR TOP BONNET | 06D058–2–WFD438 | |

LIST OF REFERENCE DRAWINGS

| SR.NO | DESCRIPTION | MATERIAL | SIZE |
|---|---|---|---|
| 09 | DISTRIBUTOR CAP PLATE | SA 240 TYPE 316 | 0.236"THK. (REF.DRG.NO.: 06D058–2–WFD497) |
| 08 | DISTRIBUTOR PLATE | SA 240 TYPE 316 | 0.236"THK. (REF.DRG.NO.: 06D058–2–WFD496) |
| 07 | DOWNCOMER | SA 249 TP 316 | 0.079"THK. (REF.DRG.NO.: 06D058–1–WFD494) |
| 06 | TUBE | SA 249 TP 316 | 0.079"THK. (REF.DRG.NO.: 06D058–2–TSL438) |
| 05 | CHANNEL FLANGE | SA 516 GR.70/ SA 266 GR.2 (NORMALIZED) | 4.33"THK. (REF.DRG.NO.: 06D058–2–WFD495) |
| 04 | TUBE SHEET | SA 240 TYPE 316 | 2.165"THK. (REF.DRG.NO.: 06D058–2–TSL438) |
| 03 | TORI.DISHED END (TOP) | SA 240 TYPE 316 | 0.393"THK. (REF.DRG.NO.: 06D058–2–WFD438) |
| 02 | TORI.DISHED END (BOTTOM) | SA 240 TYPE 316 | 0.314"THK. (REF.DRG.NO.: 06D058–1–WFD495) |
| 01 | MAIN SHELL | SA 240 TYPE 316 | 0.314"THK. (REF.DRG.NO.: 06D058–1–WFD494) |

PART DETAILS

| 248.0 | 175.22 | 217.41 | 205.41 | 248.00 | 218.64 |
|---|---|---|---|---|---|
| SHELL SIDE | TUBE SIDE | SHELL SIDE | TUBE SIDE | SHELL SIDE | TUBE SIDE |
| STARTUP | | NORMAL OPERATION | | UPSET | |

TABLE NO.1 : MEAN METAL TEMPERATURE (°F)

| REV. NO. | DESCRIPTION | DRAWN | CHKD. | APPD. | DATE |
|---|---|---|---|---|---|
| 5 | AS BUILT DRAWING ⚠ | P.S.Z. | Y.S.G. | K.B. | 01-AUG-2008 |
| 5 | REVISED AS MARKED ⚠ | P.S.Z. | Y.S.G. | K.B. | 30-JULY-2008 |
| 4 | REVISED AS MARKED ⚠ | P.S.Z. | Y.S.G. | K.B. | 08-JULY-2008 |
| 3 | REVISED AS MARKED ⚠ | P.S.Z. | Y.S.G. | K.B. | 06-May-08 |
| 2 | REVISED AS MARKED ⚠ | P.S.Z. | Y.S.G. | K.B. | 08/04/2008 |
| 1 | REVISED AS MARKED ⚠ | P.S.Z. | Y.S.G. | K.B. | 30/01/2008 |
| 0 | FOR FABRICATION | P.S.Z. | Y.S.G. | K.B. | 28/11/2007 |

CLIENT : LOUISIANA GREEN FUELS LLC.
PLANT : 22.45 MGPY DEHYDRATED ETHANOL (UNDENATURED)
LOCATION : LA CASSINE, LOUISIANA, USA

PRAJ INDUSTRIES

THIS DWG. IS THE PROPERTY OF PRAJ INDUSTRIES LTD. AND SHOULD NOT BE REPRODUCED WITHOUT WRITTEN CONSENT FROM PRAJ INDUSTRIES LTD. "PRAJ HOUSE", Bavdhan, Pune–411 021. (INDIA)

ORIGINAL

TITLE : G.A. DRAWING FOR FLUBEX HEAT EXCHANGER REBOILER (H 1501)

I.D. NO. H 1501 | PIL JOB CODE 06D058
SCALE N.T.S. | CAD FILE NAME 06D058–1–GAD438
DWG. NO. 06D058 – 1 – GAD438 | SHEET 1 OF 1 | REV. 6