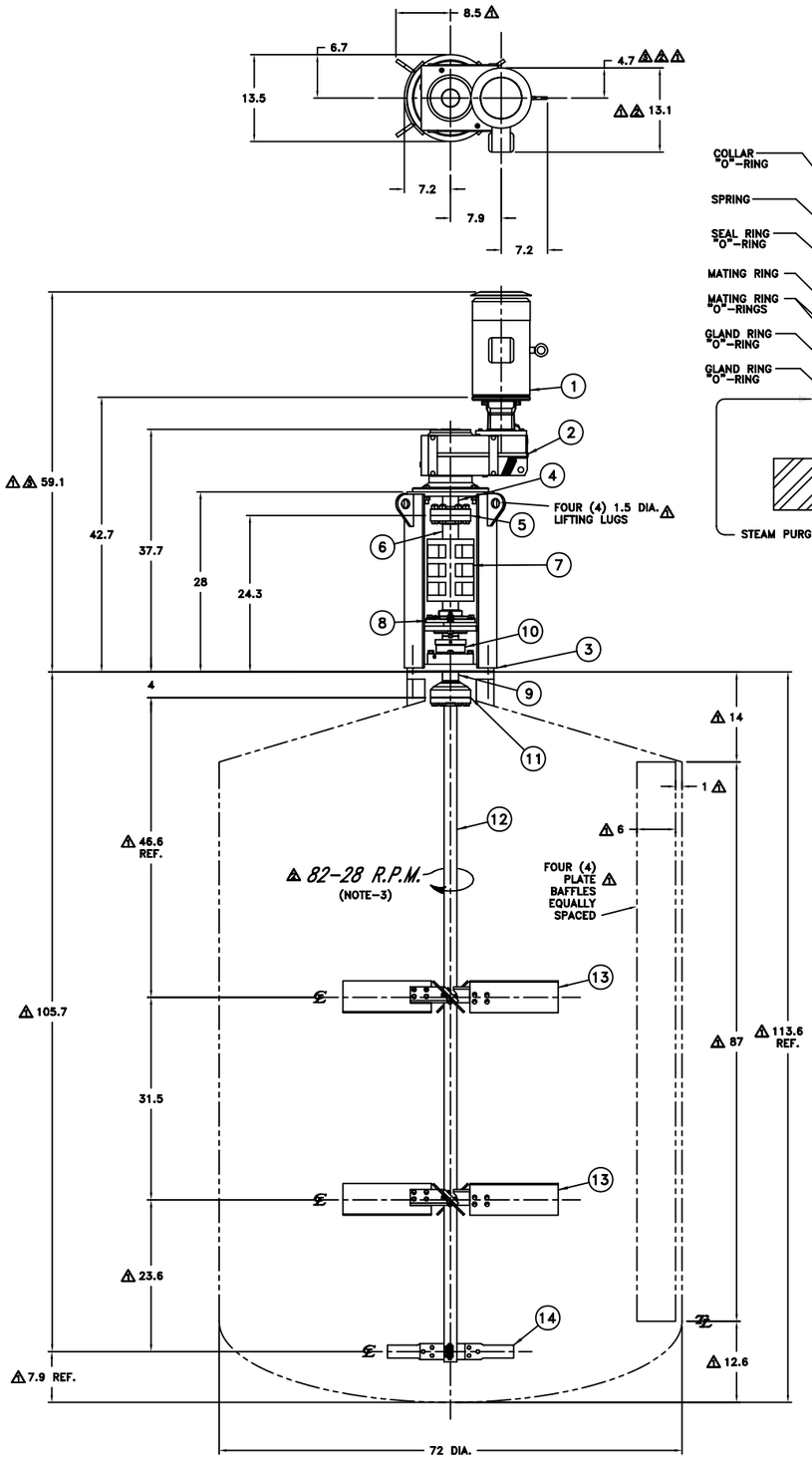

MECHANICAL SEAL DETAIL

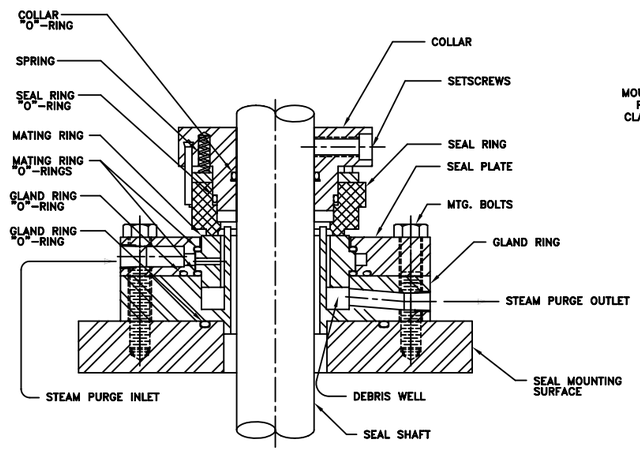

MOUNTING FLANGE DETAIL

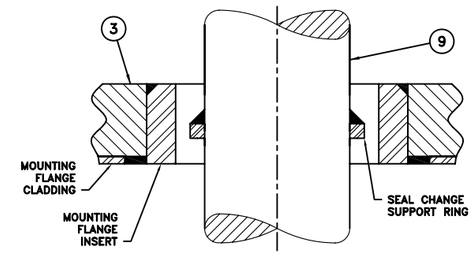

DRIVE UNIT DETAIL

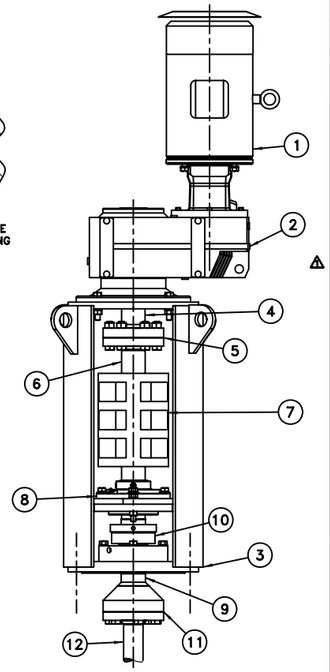

INTANK COUPLING ASSEMBLY

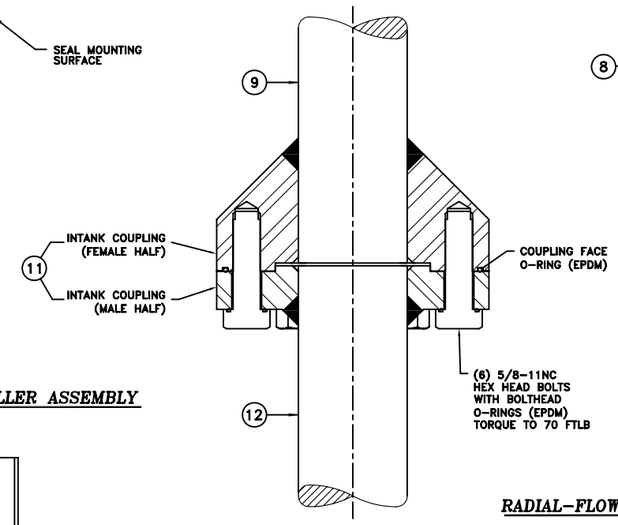

AXIAL-FLOW IMPELLER ASSEMBLY

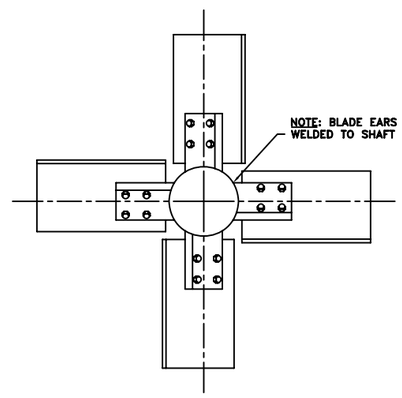

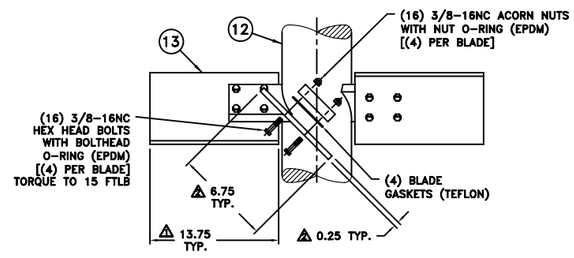

RADIAL-FLOW IMPELLER ASSEMBLY

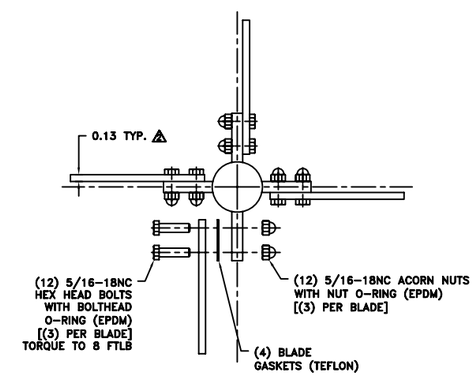

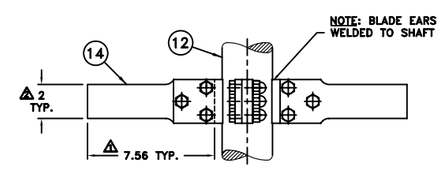

CERTIFIED OUTLINE & DIMENSION DRAWING

CUSTOMER: DUPONT DANISCO CELLULOSIC ETHANOL, LLC
LOCATION: KNOVILLE, TN, USA
PURCHASE ORDER No.: DDCE11-0056
SHIP CUSTOMER: DUPONT DANISCO CELLULOSIC ETHANOL, LLC
SHIP LOCATION: VONORE, TN, USA

ProQuip WORK ORDER: 19314 SERIAL: 19314
QUANTITY: (1) WETTED PARTS MAT'L.: (NOTE-1) WEIGHT: 800 lbs.

LOAD DATA FOR MIXER SUPPORT DESIGN

VERTICAL DOWNWARD FORCE: 800 lbs.
DYNAMIC TORQUE: 7,700 lbs-in.
VARYING DYNAMIC OVERTURNING MOMENT: 12,000 lbs-in.
MIXER SUPPORT DESIGN MUST CONSIDER BOTH MECHANICAL STRENGTH AND RIGIDITY. SUPPORT MUST BE STIFF ENOUGH TO AVOID PERCEPTABLE DRIVE MOVEMENT WHILE MIXER IS OPERATING.
TANK, BAFFLES, AND SUPPORTS ARE NOT FURNISHED BY ProQuip.

MINIMUM TANK OPENING: (NOTE-2)

ITEM	PART No.	ITEM DESCRIPTION
1		MOTOR - 5 HP; 1800 RPM; 460 V; 3 Ph; 60 Hz
		FRAME: 184TC TYPE: TEFC (NOTE-3)
2	SEW EURODRIVE	REDUCER: RF-21
3		BASE: 8"-150 LB. (RF) ANSI FLANGE (NOTE-4)
4		REDUCER SHAFT: 2.5 DIA.
5		LOW SPEED COUPLING: 6.3 DIA.
6		STUB SHAFT: 2.5 DIA.
7		SPLIT RIGID COUPLING
8		BEARING: SPHERICAL ROLLER
9		SEAL SHAFT: 2.5 DIA.
10		MECHANICAL SEAL: SINGLE (NOTE-5)
11		INTANK COUPLING: 6.3 DIA.
12		MIXER SHAFT: 2 DIA.
13		IMPELLER: 33.5 DIA., AXIAL-FLOW, (4) BLADE
14		IMPELLER: 19.63 DIA., RADIAL-FLOW, (4) BLADE

GENERAL NOTES:

1. WETTED PARTS MAT'L.: 304L S.S. WITH 1.0 MICROMETER Ra POLISH. WETTED FASTENERS ARE 304 S.S. WITH EPDM O-RINGS.
2. MINIMUM TANK OPENING: 14 I.D. TO ALLOW PASSAGE OF THE LARGEST WELDED WETTED PART INTO THE VESSEL.
3. MOTOR TYPE: MOTOR IS INVERTER DUTY 4:1 CONSTANT TORQUE / 10:1 VARIABLE TORQUE. INVERTER IS BY OTHERS. MOTOR IS PER DUPONT DANISCO CELLULOSIC ETHANOL PROJECT MOTOR SPEC. E6100 & ELECTRICAL SPEC. FOR EQUIPMENT PACKAGED SYSTEM E6200.
4. MOUNTING FLANGE DETAILS:
   ANSI SIZE: _____8"-150 LB.
   OUTSIDE DIAMETER: ____13.5
   BOLT CIRCLE: _____11.75
   No. OF HOLES: _____8
   BOLT HOLE DIA.: _____0.88
   MOUNTING FLANGE HOLES STRADDLE MIXER CENTERLINES.
   MOUNTING FLANGE FASTENERS SUPPLIED BY OTHERS.
5. MECHANICAL SEAL: FLOWSERVE/VRA WITH SANITARY GLAND. SEAL HAS CARBON VS. DURCHROME FACES AND EPDM O-RINGS.
   SEAL DESIGN CONDITIONS:
   DESIGN TEMPERATURE:___212 °F
   DESIGN PRESSURE:_____-5 TO 5 PSIG
6. ITEMS No. 1 THRU 11 (FEMALE HALF) WILL BE SHIPPED AS ONE (1) COMPLETE ASSEMBLY. ITEMS No. 11 (MALE HALF) THRU 14 AND ALL INTANK FASTENERS WILL BE SHIPPED SEPARATE FOR FIELD ASSEMBLY BY OTHERS. ITEMS No. 13 AND 14 ARE FOUR (4) PIECE, BOLTED CONSTRUCTIONS WITH THE BLADE EARS WELDED TO THE MIXER SHAFT.
7. ALL DIMENSIONS ARE IN INCHES.

CERTIFIED
FOR CONSTRUCTION
FOR: DUPONT DANISCO CELLULOSIC ETHANOL, LLC
VONORE, TN, USA
REF.: Purchase Order No.: DDCE11-0056
ProQuip, Inc. W.O.#: 19314
BY: John A. Specht DATE: 25 SEP 09

CHG NO.	REV. BY CHK'D BY	DATE	DESCRIPTION OF CHANGE
3	J.A.S.	25 SEP 09	REVISED AS BUILT.
2	J.A.S.	18 AUG 09	REVISED PER RETURNED APPROVAL DRAWING.
1	J.A.S.	23 JUL 09	REVISED PER RETURNED APPROVAL DRAWING.

ProQuip, Inc.
850 E. Highland Rd.
Macedonia, Ohio 44056
330-468-1850

SCALE NTS | BY J. A. SPECHT
DATE 08 JUN 09 | CK'D. | APP'D.

5RFU21 AGITATOR AND GENERAL VESSEL ARRANGEMENT
TAG ITEM: R3005 ENZYME DAY TANK AGITATOR

THIS DRAWING AND THE INFORMATION IT CONTAINS IS THE PROPERTY OF ProQuip, Inc. AND MAY NOT BE COPIED OR USED DIRECTLY OR INDIRECTLY FOR ANY PURPOSE OTHER THAN THAT AUTHORIZED IN WRITING BY ProQuip, Inc.

DRAWING NUMBER 4D363800 REV. 3