NOTES:

ALL FLANGES TO BE FORGED STEEL, LAP JOINT
150# ASA
ALL NECKS TO BE SCH. 10 S/S IPS STUB
END STYLE
PAINT EXPOSED STEEL 1-COAT RUSTOLEUM #769

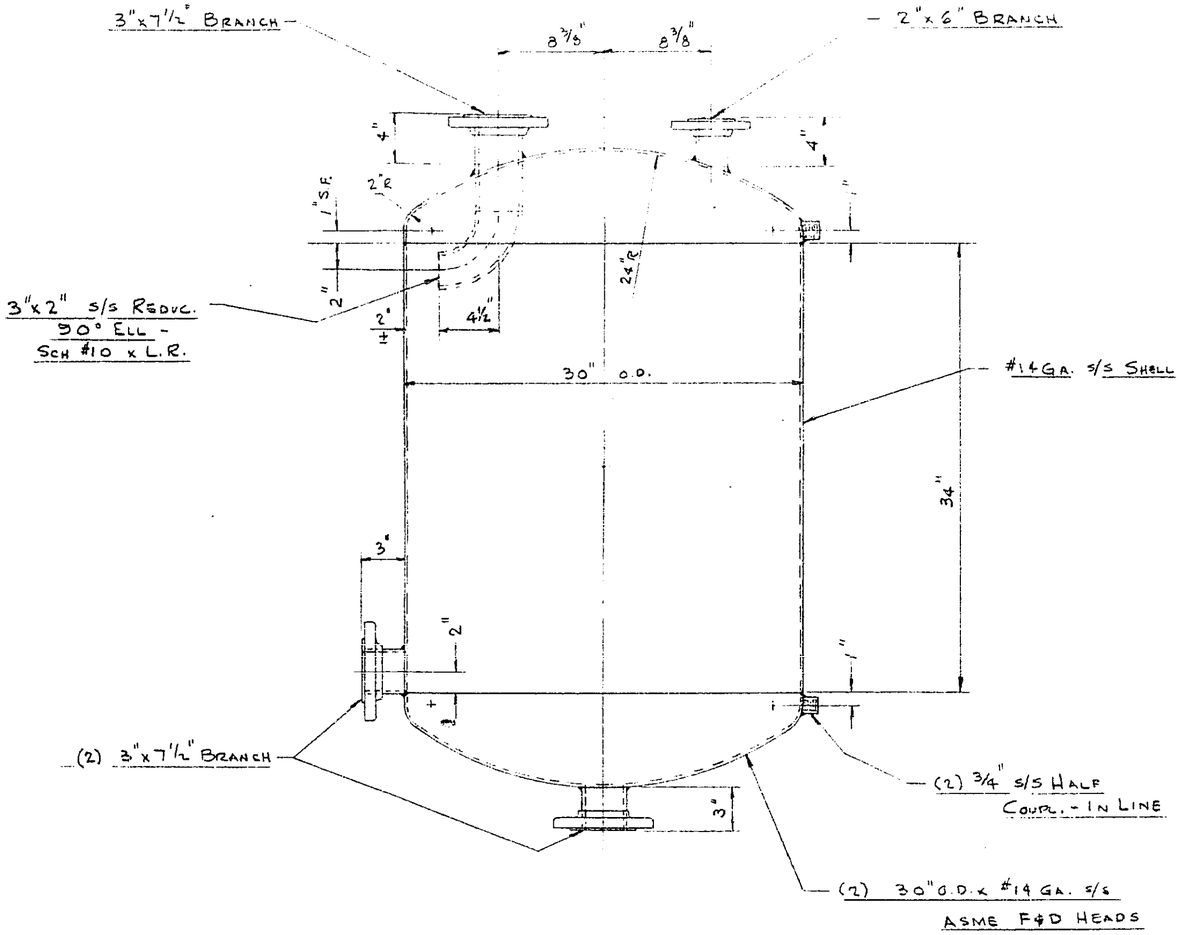

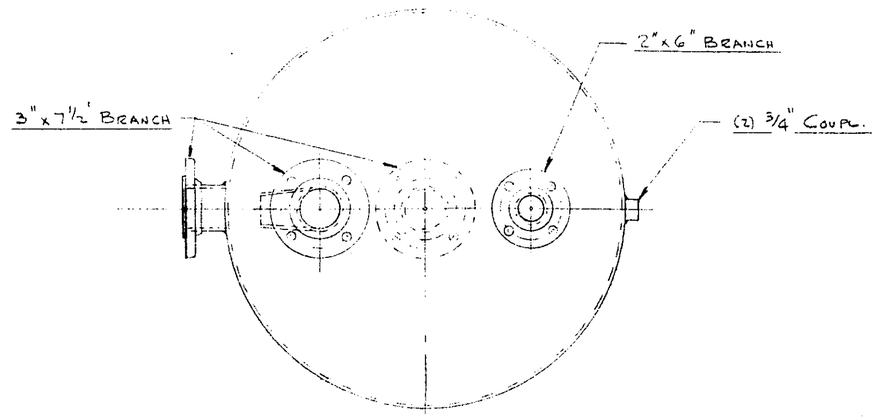

PLAN

1-REQ'D

MAT'L: S/S T316

ATMOS. W.P. (15# DESIGN @ 140°F)
(HYDRO. TEST 25#)

MARK SHIPMENT:
POS. NO. "A5-455" — FILE
EQUIP. CODE "XTB-260"

GRIND ALL INTERNAL
WELDS SMOOTH
INTERNAL SURFACES 2B
C.R. FINISH

XTB-260

DRAWN WNK 1-25-61	THEO. WALTER COPPER WORKS INCORPORATED NEWARK, N.J.	DATE BY	APPROVED
CHECKED ✓		MATERIAL	AS NOTED
SCALE 1½" = 1'-0"		CUST. FILE	HLR
PATTERN —	120 GAL. S/S TANK - VERTICAL	REFERENCE	
		ORDER	7508
		DRAWING NUMBER	2111
		SHEET 1 OF 1	

REV. ①

HLR P.O. #76772

NOTES:

ALL FLANGES TO BE FORGED STEEL, LAP JOINT
150# ASA

ALL NECKS TO BE SCH. 10 S/S IPS STUB
END STYLE

PAINT EXPOSED STEEL 1-COAT RUSTOLEUM #769

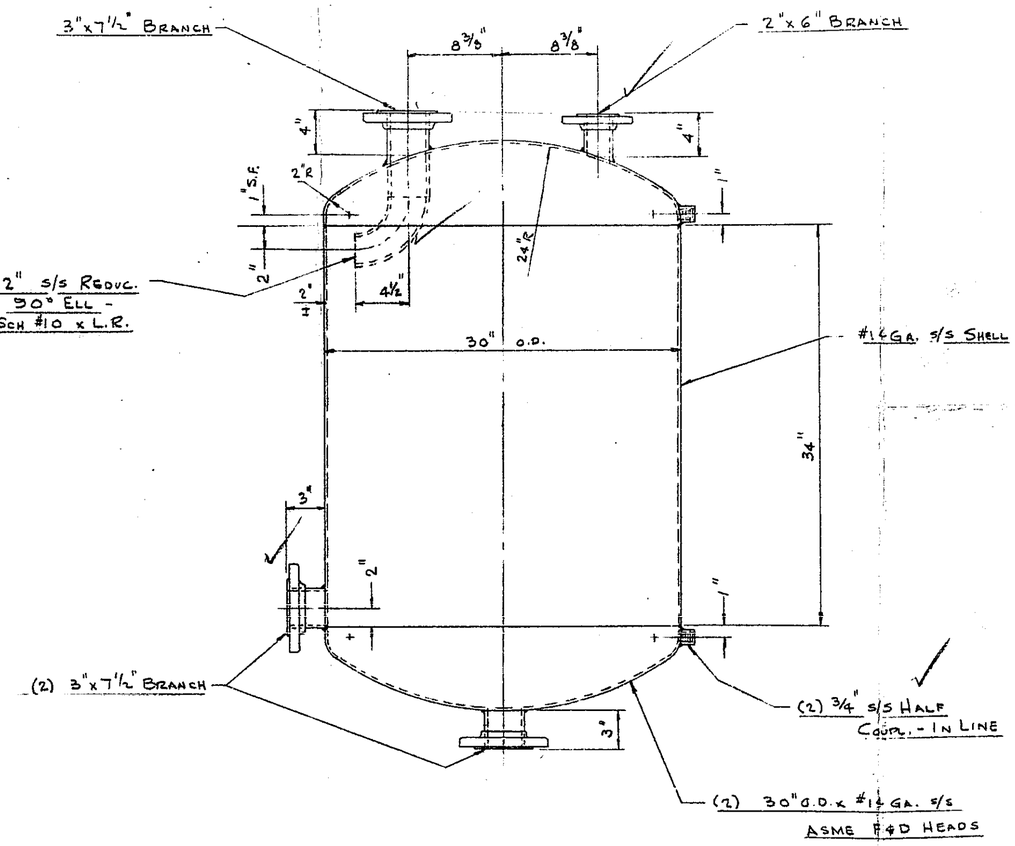

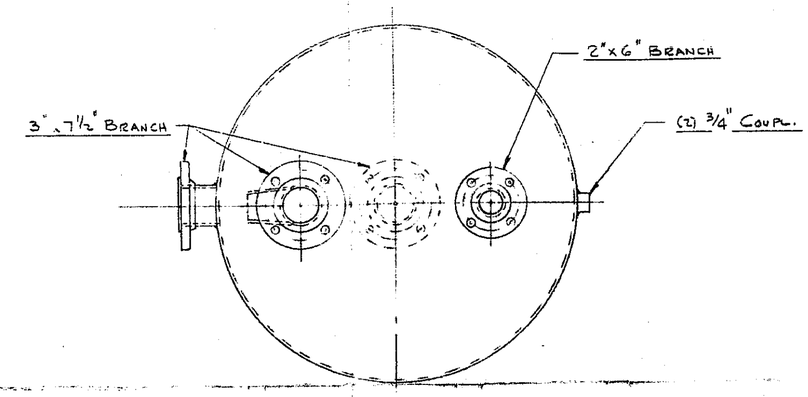

PLAN

1-REQ'D

+60°C

MATL: S/S T316

ATMOS. W.P. (15# DESIGNED (-) 80°F)
(HYDRO. TEST 25#)

MARK SHIPMENT:
POS. NO. "A"
EQUIP. CODE "XTB-260"

XTB-260

APPD 2/4/61

GRIND ALL INTERNAL WELDS SMOOTH
INTERNAL SURFACES 2B
C.R. FINISH

DRAWN WNK 1-25-61	ALTERED BY	DATE BY	APPROVED
CHECKED ✓	THEO. WALTER COPPER WORKS INCORPORATED	MATERIAL	As Noted
SCALE 1½" = 1'-0"	7 ESSEX ST. NEWARK, N. J.	CUST. FILE	HLR
PATTERN —	120 GAL. S/S TANK - VERTICAL	REFERENCE	
		JOB NO.	7508
		DRAWING NUMBER	211
		SHEET 1 OF	

HLR 2