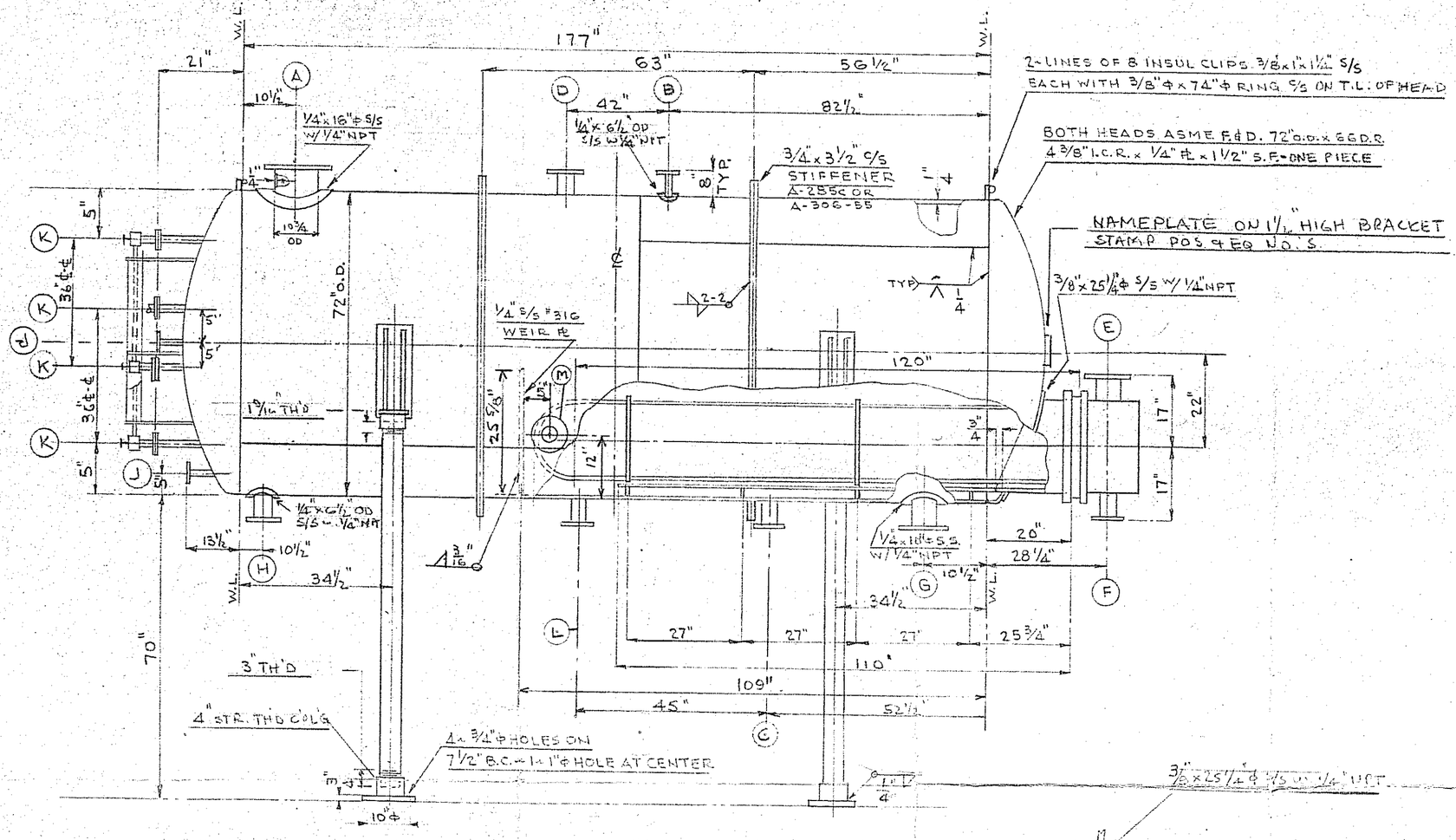

ALL NOZ. FLGES STR. TANK ℄'S

MATERIAL

SHELL & HEADS - S/S 316 A/285C/A-181/A-312-316
STEAM CHEST - A-53 S'M'LS - A 285C/A-181
TUBES - A 213/316 S/S - 3/4" - 18 BWG S'M'LS
TUBE SHEET - A-240-316
BOLTING - A-325/A193 B7 - A-194 CAD. PL'D
GASKETS - COMP ASB. 1/16" JM 76 OR EQUAL
SUPPORTS A-285C/A-53 C/S
REIN'G PADS - A-240-316

ALL NOZZLES SCH 40 PIPE & STUB END (EXCEPT 'A') WITH 150# C/S-V.S. FL'GS.

FINISH

S/S - CLEAN INT & EXT SURFACES PER SPEC SSPC-SP-2

C/S - CLEAN PER SSPC-SP 2
PAINT PRUFCOAT - P-50

CLOSE OPENINGS

WT EMPTY - 7200# FLOODED - 37000#
1 - REQ'D ASME CODE STAMPED TEMAC
NO - ST. REL - X RAY
~~DESIGN - VESSEL - 5# @ 52 PSIG @ 300°F~~
BUNDLE & HEAD - 85 PSIG @ 390°F
HYDROTEST - VESSEL 60 P.S.I.G.
BUNDLE & HEAD 140 P.S.I.G.
COR. ALLOW: SHELL 0"; STEAM CH. 1/16"
HOFFMANNLAROCHE INC.
P.O. E 264426 B — PROJECT 66
POS Nº B-3-5665 — EQ Nº XWC-17
B-3-5666 — HEX-570
CONT - ARTHUR G McKEE & CO.
CONT P.O. MCK-3726-23-55#7

	Nº REQ'D	SIZE	RATING	FACING	REMARKS
M	1	1 1/2"	150#	RF	
L	1	2"		VS	
K	4	1/2"		RF	GAGE GLASS
J	2	1"		RF	L.I.C. (D.P. CELL)
H	1	4"		VS	LIQUID OUTLET
G	1	6"		↓	LIQUID INLET
F	1	3"		RF	COND OUTLET
E	1	6"		RF	STEAM INLET
D	1	1"		RF	PRC
C	1	3"		VS	PROCESS INLET
B	1	4"			PSV
A	1	10"	↓	↑	VAPOR OUTLET

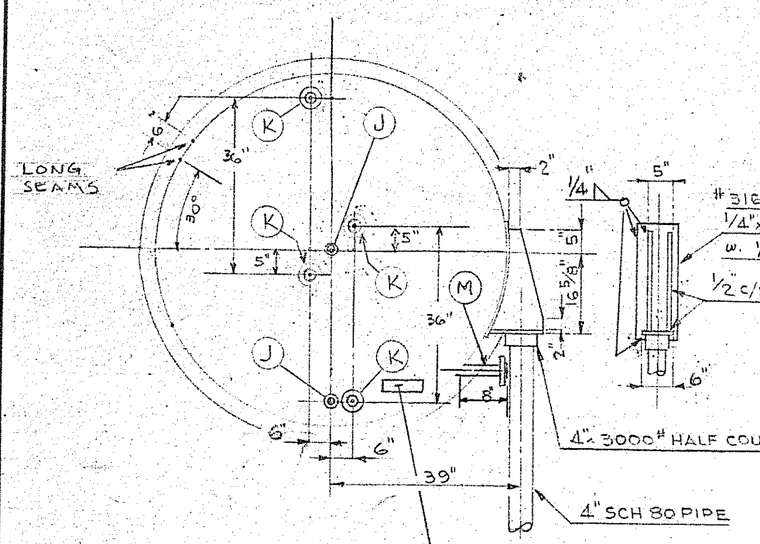

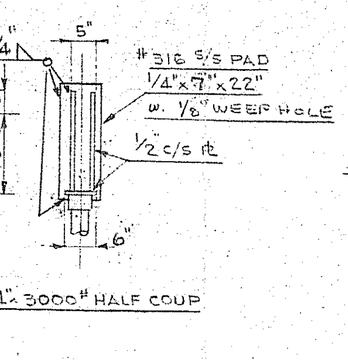

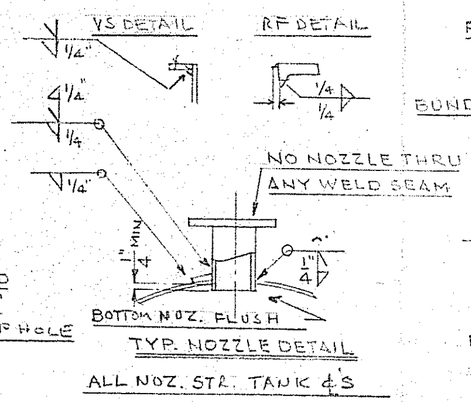

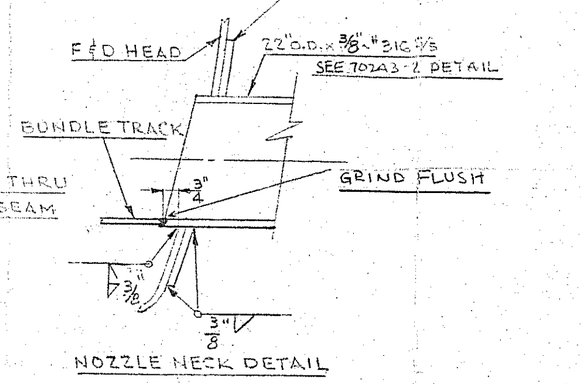

NOTE

GAGE GLASS - ERNST FIG 8SS CAT # 3010
MODIFIED W/ 150# 1/2" R.F. SCR. FL'G.
2 REQUIRED

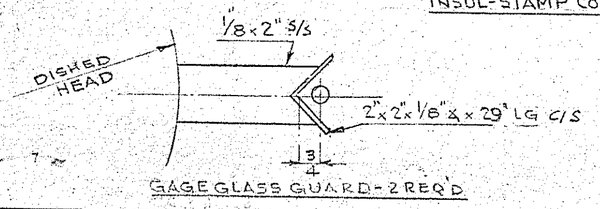

GAGE GLASS GUARD - 2 REQ'D

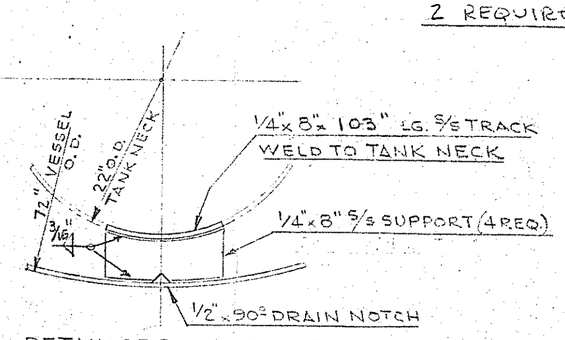

DETAIL OF BUNDLE SUPPORT
1 1/2" = 1'-0"

10823

ENIVEL ENGINEERING CORPORATION
CLIFTON NEW JERSEY

McKEE DWG # 5665-1

XWC-17

REBOILER

EQ CODE XWC-17 — B 3 5665

SCALE	BY	DATE	APP'D	DATE	ORDER	~~DRAWING NO.~~
1/2" = 1'-0"	AL H	7/70		7/70	70243	70243-1-B

ROSEN 70312