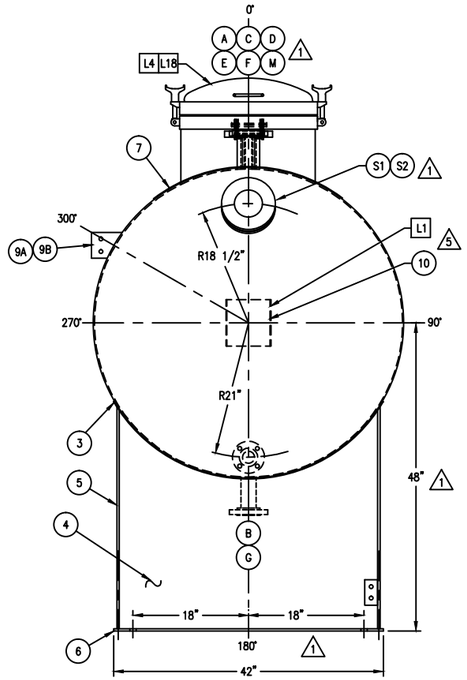

PLAN VIEW OF VESSEL
SCALE: 1"=1'-0"

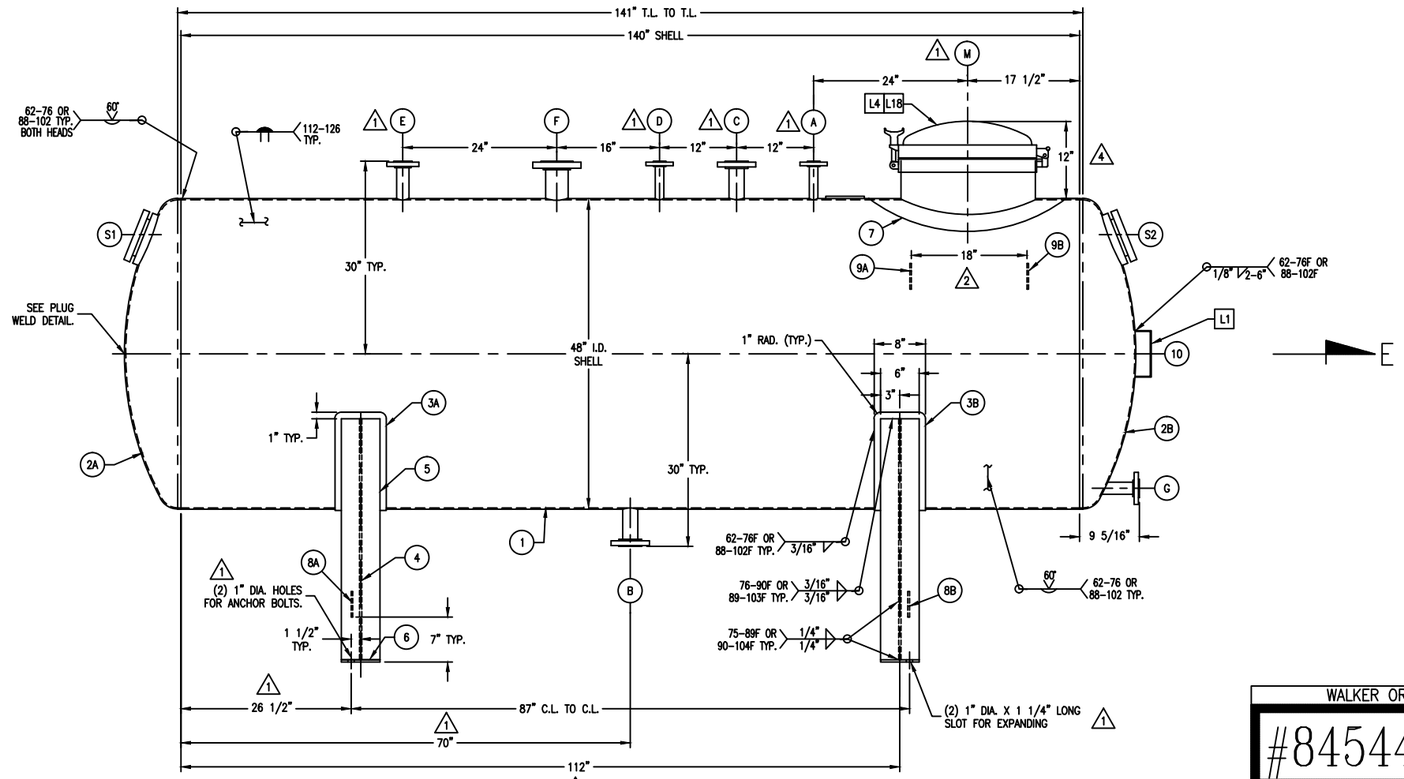

ELEVATION VIEW OF VESSEL
SCALE: 1"=1'-0"

SAFETY LABEL SCHEDULE			
ITEM	QTY	PART #	DESCRIPTION
L1	1		ASME-NB NAMETAG
L4	1	MH991-4	RELIEVE PRESSURE
L18	1	GF991-18	AIR OUT TANK

SPECIAL NOTES:

1. ALL NOZZLES TO BE COVERED WITH PLASTIC OR PLYWOOD FOR SHIPMENT.
2. ALL REINFORCING PAD SECTIONS SHALL HAVE 1/4" NPT WEEP HOLE LOCATED AS LOW AS POSSIBLE IN THE PAD WHEN THE VESSEL IS IN OPERATING POSITION. PLUG WEEP HOLE WITH HEAVY GREASE.
3. ALL WELDS TO BE FULL PENETRATION & CONTINUOUS, UNLESS NOTED OTHERWISE.
4. EXPOSED INSIDE EDGES OF NOZZLES OR MANHOLES SHALL BE SMOOTH & CORNERS SHALL BE CHAMFERED OR ROUNDED.
5. VESSEL REQUIRED MARK NO. T-703
6. VESSEL FABRICATOR SHALL FURNISH & INSTALL ALL PARTS, UNLESS OTHERWISE NOTED.
7. ALL FLANGE HOLES ARE TO STRADDLE MAJOR CENTERLINES, UNLESS OTHERWISE NOTED.

A.S.M.E.

WALKER ORDER NO.

#84544 DJS

NO. REQ'D. 1 SERIAL NO. NL9318

APPROVED FOR CONSTRUCTION

BY _____ DATE _____

ROUTING	
SHOP	
SUPERVISORS	
QUALITY CONTROL	
MACHINE SHOP	
TOOL ROOM	
CARPENTER	
FILE	
JOB PLANNER	
SALESMAN	
CUSTOMER	

REV.	DATE	ISSUE	REVISION DESCRIPTION	APP'D. BY
5	4/10/97	1	AS BUILT.	
4	2/25/97	1	CHANGED DIM. FOR MANWAY.	DS 2/25/97
3	2/18/97	1	SADDLE SUPPORT PADS WERE 3/16" THK. & PRESSURE WAS -7 PSIG.	DS 2/24/97
2	2/3/97	1	ADDED DIM. FOR LADDER CLIPS.	DS 2/3/97
1	12/9/96	1	REVISED DRAWING PER CUSTOMER REVISIONS & UPDATES.	DS 12/9/96

ITEM	PART #	QTY.	SIZE/THICK	MATERIAL (SA #)	DESCRIPTION
10	5	1	12 GA.	304L S.S.	NAMETAG BRACKET
9	1	2	1/4" THK.	304L S.S.	LADDER CLIPS
8	1	2	1/4" THK. X 2" X 4"	304L S.S.	GROUNDING LUG
7	1	1	3/16" X 35" O.D.	304L S.S.	REINFORCING COLLAR FOR FITTING "M"
6		2	3/8" THK. X 6" X 44 3/8"	C.S.	MOUNTING SADDLE FLOOR PADS
5		2	3/8" THK. X 6" WIDE	C.S.	MOUNTING SADDLE END CAPS
4		2	3/8" THK.	C.S.	MOUNTING SADDLE CENTER WEB
3	3	2	8 GA. X 8" WIDE	304L S.S.	MOUNTING SADDLE SUPPORT PADS
2	1	2	3/16" THK.	304L S.S.	HEADS (F & D) 48" D.R. - 3" K.R. - .5" S.F.
1		1	3/16" THK.	304L S.S.	SHELL

MATERIAL SCHEDULE

ITEM	PART #	QTY	STUB MATERIAL	FLANGE MATERIAL	SIZE	RATE	DESCRIPTION
S2		1	304L S.S.	304L S.S.	4" DIA.	---	SIGHTGLASS ASSEMBLY
S1		1	304L S.S.	304L S.S.	4" DIA.	---	SIGHTGLASS ASSEMBLY W/LIGHT
M	1	1	1/4" 304L S.S.	304L S.S.	24" I.D.	---	MANWAY ASS'Y. W/HINGE & (8) SWING BOLTS
G	1	1	SCH.40 304L S.S.	304L S.S.	1 1/2"	150# RF	SLIP-ON FLANGE (TG CONNECTION)
F	1	1	SCH.40 304L S.S.	304L S.S.	3"	150# RF	SLIP-ON FLANGE (LT CONNECTION)
E	1	1	SCH.40 304L S.S.	304L S.S.	1 1/2"	150# RF	SLIP-ON FLANGE (SPARE) W/BLIND FLANGE & GASKET
D	1	1	SCH.40 304L S.S.	304L S.S.	1"	150# RF	SLIP-ON FLANGE (PG CONNECTION)
C	1	1	SCH.40 304L S.S.	304L S.S.	2"	150# RF	SLIP-ON FLANGE (VENT)
B	1	1	SCH.40 304L S.S.	304L S.S.	3"	150# RF	SLIP-ON FLANGE (LIQUID OUT)
A	1	1	SCH.40 304L S.S.	304L S.S.	1"	150# RF	SLIP-ON FLANGE (LIQUID IN)

NOZZLE SCHEDULE

STANDARD INFORMATION:

ASME: YES SECTION VIII, DIV. 1- 1995 - A95

DESIGN PRESSURE & TEMP.: SHELL: 30 PSIG & -6 PSIG AT 270°F./-20°F. 3

HYDROTEST AT AMBIENT: SHELL: 48 PSIG. 1

CORROSION ALLOWANCE: NONE

PASSIVATION REQ'D.: NO

SHOP TOLERANCE: PER FLUOR DANIEL SPECIFICATION 685-255-58001

RADIOGRAPH: NO

JOINT EFFICIENCY: SHELL: 70% HEADS: 70%

N.D.E.: NO

P.W.H.T.: NO

TANK CONTENTS:

SP. GR.: 0.915

APPROX. EMPTY WT: 2,400 LBS. OPERATING WT.: 9,200 LBS.

FINISH: INTERIOR: SURFACES - #4 POLISH (32 Ra MICROINCH MAX.)
WELDS - F5 (GROUND FLUSH) 32 Ra OR BETTER
EXTERIOR: SURFACES - #1 MILL PLATE (HOT ROLLED & PICKLED) GLASS BEAD BLAST
WELDS - F2 (GLASS BEAD BLAST)
ALL C.S. PARTS: SANDBLASTED & PRIME PAINTED W/ UNIVERSAL PRIMER, ie. PRUFCOAT P-50

WALKER REFERENCE DRAWINGS: S-28273-D WELD DETAILS S-16223-B SIGHTGLASS
S-28482-D MANWAY

CRATING INSTRUCTIONS: 6. BLOCK AND CRIB AS NEEDED ON TRAILER.

62-76F CORNERS ONLY SEAL

NAT'L BD.

CERTIFIED BY
WALKER STAINLESS EQUIPMENT CO. INC.

VESSEL 30 & -6 PSIG MAWP AT 270 °F
MIN DESIGN METAL TEMP -20 °F AT 30 PSI
JACKET PSIG MAWP AT °F
MIN DESIGN METAL TEMP °F AT PSI
SERIAL NO. NL9318 DATE
CAPACITY 1100 GAL MATL. 304L SS
MODEL T-703 DWG SP-28272-D
SALAD OIL TANK

WALKER A CARLISLE COMPANY

WARRANTY

Walker Stainless Equipment Co. warrants new tanks or equipment manufactured by us to be free from defects in material and workmanship under normal use and service for a period of 1 year after shipment from the factory.

For breach of warranty of any kind, the measure of damages to be recoverable from Walker Stainless Equipment Co. shall be limited to repair or replacement of the part or equipment which examination discloses to be the satisfaction of seller to be defective, or the payment of the price or making such repair or replacement, at the option of the seller.

This warranty is expressly in lieu of all other warranties, expressed or implied, and all other obligations and liabilities on our part. Any warranty of merchantability is expressly excluded. We neither assume nor authorize any other persons to assume for us any liability in connection with the sale of our products, and no other warranty will be honored unless in writing and signed by an officer of the corporation. This warranty shall not apply to any product of our manufacture which has been repaired or altered outside our factory, or which in our opinion, has been subject to misuse, negligence or accident. Seller will not assume any charges for liability or responsibility for transportation to and from repair point, nor any loss of time due to repair. This warranty does not cover components of other manufacturers beyond such warranty as is made by such manufacturer.

Any action for breach of warranty shall be commenced within one (1) year of said breach or be forever barred.

All information including design details and dimensions contained hereon are confidential and proprietary and must not be reproduced, disclosed to others, or used in the production of parts shown, unless authorized in writing by Walker Stainless Equipment Company.

NOTES:

1. Dimensions, unless otherwise indicated are nominal and standard shop tolerances are to be expected. Measurements for any field attachments should be verified on site by others before fabrication of the attachments.
2. If used in contact with materials containing salt, chlorides or other corrosive materials, the corrosion resistance of this equipment is not the responsibility of Walker Stainless Equipment Company.

WALKER
A CARLISLE COMPANY

WALKER STAINLESS EQUIPMENT CO., INC.

SCALE: 1"=1'-0"	APPROVED BY:	DRAWN BY: S.SMITH
DATE: 12/9/96		REVISED: 5

CLIENT: FEDR/CSC/FLUOR DANIEL
PROJECT: VENURI / PROJECT
P.O. # 8442000-01-500001
COUNTRY: USA
LOCATION: HARRIS COUNTY, TX

T-703 SALAD OIL TANK

JOB: FLUOR DANIEL, INC., GREENVILLE, SC

DRAWING NUMBER: SP-28272-D

NOTE! DO NOT SCALE THIS DRAWING!