E-202

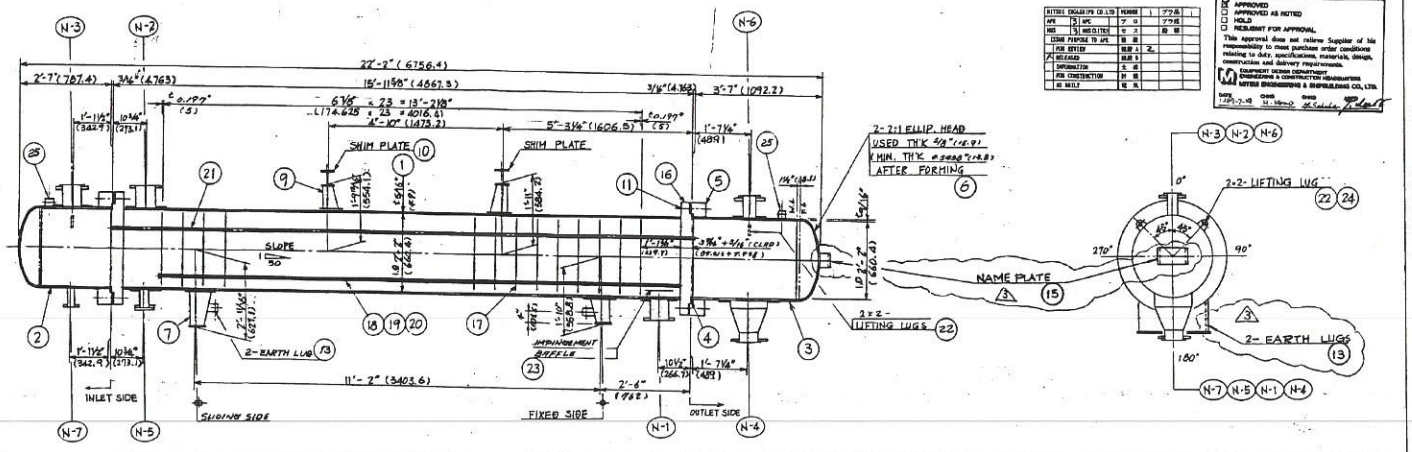

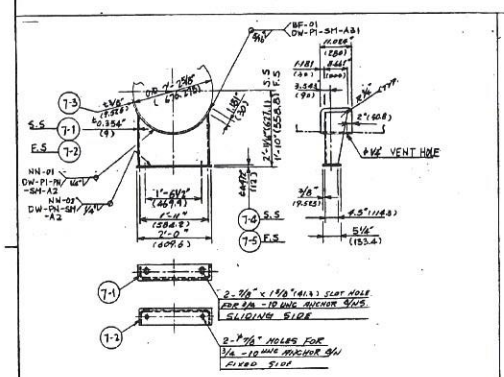

SADDLE SUPPORT

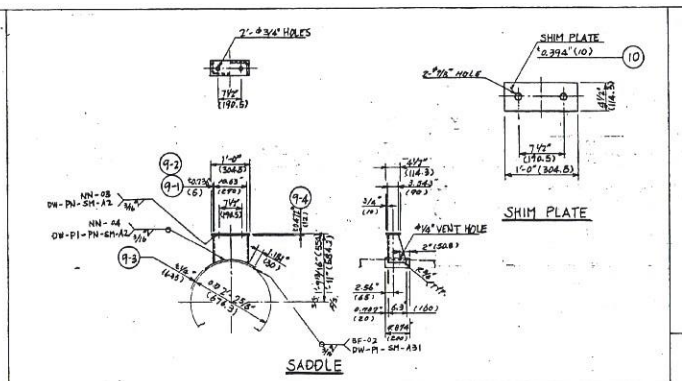

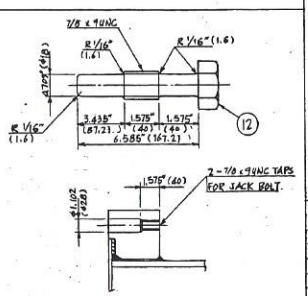

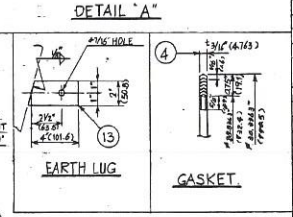

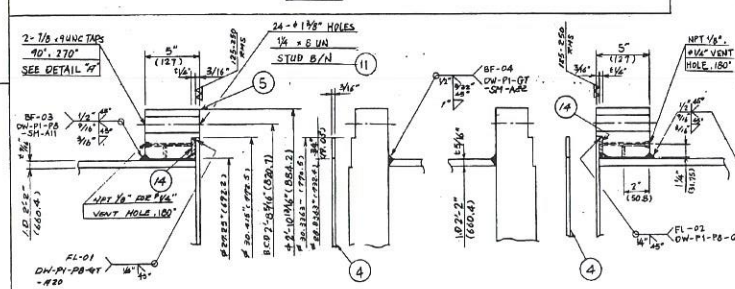

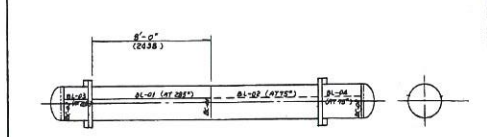

WELDING SEAM LINE DETAIL

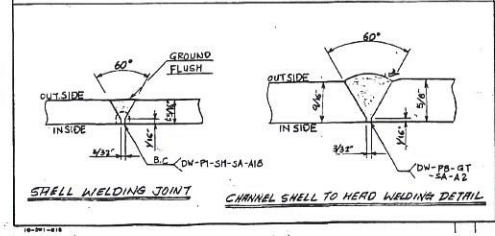

SHELL WELDING JOINT

CHANNEL SHELL TO HEAD WELDING DETAIL

APPROVED
APPROVED AS NOTED
HOLD
RESUBMIT FOR APPROVAL

This approval does not relieve Supplier of his responsibility to meet purchase order conditions relating to data, specifications, materials, design, construction and delivery requirements.

MITSUI ENGINEERING & SHIPBUILDING CO., LTD.

REQ'D NO. : 1
SURFACE AREA: 1259 ft²
CAPACITY : 582 GAL.

NOTE

1. WELD TOLERANCES ARE AS FOLLOWS

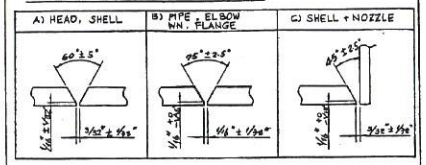

2. GASKET CONTACT SURFACE FINISHES SHALL CONFORM TO ANSI B16.5 AND THE FOLLOWING.

GASKET TYPE	FINISH RMS	TOOL RADIUS	FEED/REVOLUTION	APPLICATION
V# 592	125 - 250	1/16"	1/64"	CHANN. SIDE
V# 1501	AT 500	1/16"	1/32"	SHELL NOZZLE

3. EXPANSION JOINT DESIGN TEMPERATURE

UNIT: (°F)

CASE	SHELL SIDE	TUBE SIDE
CASE-1 (OPER.)	91.4	100.8
CASE-2 (INLET AT 90°F)	55.4	73.4

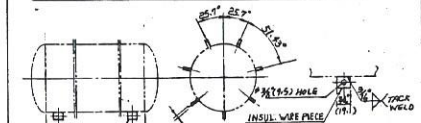

INSUL. WIRE PIECE DETAIL

14	23		INSUL. WIR PIECE	SA-240 Gr.304	R 1/16"
4	24	GC-HE1-05390	PAD	SA-240 Gr.304	R 5/16"
1	23		IMPINGEMENT R	JIS G 3101 SS41	R 0.234(6)
4	22		LIFTING LUG	SA-516	R 1 9/16" NORMALIZED
311	21		TUBE	SA-213 TP 304	2.01" x BWG 14 (AVE)
12	20		DOUBLE NUT	JIS G 3101 SS41	3/8-16UNC.
3 SET	19		TIE ROD	JIS G 3101 SS41	R8 φ10
3 SET	18		SPACER	JIS G 3452 SGP	3/8"
24	17		BAFFLE R	JIS G 3101 SS41	R 0.197"(5)
2	16	GC-HE1-05390	TUBE SHEET	SB 265 Gr 1 SA-240 Gr.304	3 9/16"+5/16" CLAD
1	15	GC-HE1-05419	NAME PLATE	SUS 304	R 0.039"(1)
2	14		LINING PLATE	SP-260	R 5/16"
2	13		EARTH LUG	SP-260	R 3/4"
4	12		JACK BOLT	JIS G 3101 SS41	7/8-9UNC
46	11		STUD BOLT/HEAVY NUTS	SA-193 B7 / SA-194 2H	1 1/4 -8 UNC x 1 1/2" (38.5)
2	10		SHIM PLATE	JIS G 3101 SS41	R 0.394"(10)
2	9-4		BASE PLATE	JIS G 3101 SS41	R 0.472"(12)
2	9-3		WEAR PLATE	SP-516	R 1/4"
1	9-2		WEB PLATE	JIS G 3101 SS41	R 0.236"(6)
1	9-1		WEB PLATE	JIS G 3101 SS41	R 0.236"(6)
1	7-5		BASE PLATE	JIS G 3101 SS41	R 0.472"(12)
1	7-4		BASE PLATE	JIS G 3101 SS41	R 0.472"(12)
2	7-3		WEAR PLATE	SP-516	R 3/8"
1	7-2		WEB PLATE	JIS G 3101 SS41	R 0.354"(9)
1	7-1		WEB PLATE	JIS G 3101 SS41	R 0.354"(9)
2	6		HEAD PLATE	SP-240	R 5/8"
2	5		CHANNEL FLANGE	SA-105	t 5"
2	4		GASKET	V# 592	t 3/16"
1	3		CHANNEL PLATE	SP-240	R 9/16"
1	2		CHANNEL PLATE	SP-240	R 9/16"
1	1		SHELL PLATE	SA-516 Gr.60	R 5/16"
QTY	DWG NO.	DRAWING NO.	NOMENCLATURE	MATL	SPECIFICATION

DOOSAN MANUFACTURING CO., LTD.

CUSTOMER REFERENCE: APR/MES

FOR APPROVAL — CONSTRUCTION MANUFACTURING ISSUED 1987-12-17

MARK	DESCRIPTION	DATE	DRAWN	CHK'D	APP'D
A	AS PER MES CMT	87.12.17			
B	DC-11(56)	87.12.17			
C	AS PER MES CMT	87.12.18			

APPD BY: Yoon 87.12.3 | CHK'D BY: H. Lim 87/9 | DRAWN BY: T.H. Jeong 86.9.16 | APP'D BY: H. Choi 1986.9.16

TITLE: APPF PROJECT E-202 2ND REACTOR OVHD CONDENSER ASSEMBLY & DETAIL

SCALE: 1/5

DWG. NO.: GC-HE1-05389 | REV: 3

HEAT EXCHANGER DESIGN DATA

CODE: ASME SEC.VIII DIV.1, 1983EDW/W85 TEMA "C" 6TH EDITION + 1982 ADD. | STAMP: [X] REQ'D [ ] NOT REQ'D

	SHELL SIDE	TUBE SIDE	WEIGHT	
FLUID ALLOCATION	CCW	PR	TUBE BUNDLE	12050 LB
DESIGN PRESSURE	85 PSig	638 PSig	OPERATING	15900 LB
OPERATING PRESSURE	43 PSig	412-555 PSig	TEST	15800 LB
DESIGN TEMPERATURE	140°F	161°F	RADIOGRAPHY (R.T.)	
FLUID INLET TEMPERATURE	86°F	131-158°F	FULL [X] SPOT 5.5% [ ] NO	
FLUID OUTLET TEMPERATURE	96.8°F	104°F	JOINT EFFICIENCY: SHELL SIDE 1.0, TUBE SIDE 1.0	
TEST PRESSURE HYDROSTATIC	1.3 x 85 = 110.5 PSig AT 100°F	959 PSig AT 100°F	TUBE SIZE: SIZE: 1"OD x BWG 14 (AVE)	
TEST PRESSURE PNEUMATIC	85 PSig	638 PSig	LENGTH: 16'-0" NO: 311	
NUMBER OF PASSES	1	1	CHANNEL: V# 592 GASKET FACE	
CORROSION ALLOWANCE	1/16"	0	GASKET: V# 592 x V# 1501 CS	
STRESS RELIEVED	YES [X] NO	YES [X] NO	INSULATION: 1.5 PERSONNEL PROTECTION	

REMARKS: SURFACE TREATMENT: FOR C.S. PART: P.T. (SSPC-PA1), PAINT: 1 COAT (SSPC-PA2) FOR INSIDE, FOR PRIMER 2 COATS DFT 2.5-3.0 MILS

NOZZLE TABLE

MARK	SIZE	REQ'D NO.	SERVICE	CONNECTION TYPE	CONNECTION RATING	CONNECTION MATL	NECK THK	NECK MATL	REINF. PAD THK	REINF. PAD MATL	PROJECTION FM VESSEL L	DRAWING NO.
N-7	3/4"	1	DRAIN	A.W.N. RF	ANSI #150	A-105	—	SA-182	—	—	1'-1 7/16"	GC-HE2-10816
N-6	4"	1	PR OUT	LJ	ANSI #300	SA-105	SCH 40	SA-312 TP-304	9/16"	8.5"	1'-0 7/16"	
N-5	3"	1	DRAIN W/BLIND FLG	W.N. RF	ANSI #150	SA-105	SCH 80	SA-312 TP-304	9/16"	7.5"	1'-7 5/8"	
N-4	14"	1	PR OUTLET	LJ	ANSI #300	SA-105	SCH 40	SA-312 TP-304	9/16"	24"	2'-3 9/16"	
N-3	6"	1	PR IN	LJ	ANSI #300	SA-105	SCH 40	SA-312 TP-304	9/16"	12"	1'-8 3/4"	
N-2	6"	1	RCCW OUT	W.N. RF	ANSI #150	SA-105	SCH 80	SA-106 Gr. B	—	—	1'-8 3/4"	
N-1	6"	1	CCW IN	W.N. RF	ANSI #150	SA-105	SCH 80	SA-106 Gr. B	—	—	1'-8 3/4"	GC-HE2-10816

NOTE: 1. ALL DIMENSIONS ARE IN MM UNLESS OTHERWISE SPECIFIED.

MITSUI ENGINEERING & SHIPBUILDING CO., LTD
ENGINEERING & CONSTRUCTION HEADQUARTERS

CUSTOMER	JOB NO HC5401
CONTRACT NO.	DOC NO. 21-ASE0202 ③
PROJECT APPF PROJECT	JOB CODE
LOCATION	TOTAL SHEET 6

This document includes Licensor's proprietary information and shall be deemed as a part of Technical Information stipulated in License Agreement.

DATA SHEET

FOR

E - 2 0 2 2ND REACTOR OVHD CONDENSER

MITSUI ENG. & SHIPBUILDING CO., LTD. ENG. & CONST. HDQRS.

Note : 1. The strength of pressure parts and load bearing parts, and weight shall be calculated by the Vendor.
Thickness, weight and dimensions of girth flange shown in this data sheet are for reference only.
2. G.F. means gasket contact face.

NOTE-THE INFORMATION CONTAINED HEREIN IS CONFIDENTIAL AND THE PROPERTY OF MITSUI ENGINEERING & SHIPBUILDING CO., LTD. AND SHALL NOT BE DISCLOSED TO OTHERS OR BE USED IN ANY MANNER OR USED FOR ANY PURPOSE OTHER EXCEPT WHEN EXPRESSLY PERMITTED BY MITSUI OR AS PROVIDED IN A SIGNED AGREEMENT WITH MITSUI ENGINEERING & SHIPBUILDING CO., LTD.

REV	BY	DATE	CHKD	DATE	CHKD	DATE	APPD	DATE
②	H Kono	1986-8-6	M.Sakabe	1986-8-6	[illegible]	86-8-6		
◇								
③	H Kono	1987-1-23	M.Sakabe	1987-1-26	[illegible]	1987-01-26		

☐ APPROVAL ☐ CONSTRUCTION ☐ REFERENCE ☐
☐ REVIEW ☐ AS BUILT DR'G ☐ PRELIMINARY ☐

DISTRIBUTION:

MES INTERNAL

APR : 3 VENDOR : PROJ : 1
MUS : 2
MPC : 3

SZ A4 1.000 8505 - 025 (10)

MITSUI Engineering & Shipbuilding Co., Ltd. | HEAT EXCHANGER

SERVICE	2ND REACTOR OVHD CONDENSER	ITEM NO.	E-202

1	TYPE	BEM	SIZE	2'-2" - 16'-0"	INSTL. Horiz. Vertical/Inclined
2	STACKING	SHELL x	SURFACE	OD BASE 1259 ft²/SHL	DUTY Btu/hr

REQD NO. 1 SHELL

	DESIGN & TEST DATA (per one shell)		SHELL SIDE	TUBE SIDE
5			SHELL SIDE	TUBE SIDE
6	CODE & STD		ASME SECT. VIII DIV.1 TEMA "C" (5th EDITION)	
7	FLUID CIRCULATED		CW	PR
8	TEMP	DESIGN	MAX 140 °F MIN °F	MAX 157 °F MIN °F
9		OPER	MAX 96 °F DATM 86.8 °F	MAX 131-158 °F MIN 104 °F
10	PRESS	DESIGN	95 psig	528 psig
11		OPER	43 psig	412 ~ 555 psig
12				
13	TEST	HYDRO	123 psig	957 psig
14		PNUEM	85 psig	638 psig
15		VACUUM	———	———
16	NO. OF PASSES		1	1
17	POST WELD HT TREAT		Yes: (No)	FLT HD EXP: Yes: (No)
18	RADIOGRAPHIC EXAM		Full: (Spot) None	FLT HD EXP: Full: (Spot) None
19	JOINT EFF (CYL/HD)		0.85 / —	FLT HD EXP: 0.85 / 1.0
20	TYPE OF FLG END		~~WN-FL-MF-TG-RJ~~	FLT HD EXP: WN (FL) MF TG RJ
21	WELDER'S QUALIF			
22	EXP JOINT DSGN TEMP		OPTION REQD SEE NOTE 4 °F	SEE NOTE 4 °F
23	INSUL (THK, AREA)		——— in ——— ft²	D 1 in ——— ft²
24	SURF PREP (EXT/INT)			
25	PAINTING		(SH-03)	S-07 (C.S ONLY)
26	TUBE DATA SEE ATTACHED SHEET	LAYOUT	Pitch 1 1/16 in	Flow: (A) B
27		NO.-DIM	311 - 1" OD BWG	THK 11'-6" STR LG
28		ATTACH	Expanded (Seal Weld)	Strength/Welded
29	CROSS BAF TYPE		Segmental -Horiz (Vert) Cut 24.4 %	
30	SPL PARTS		~~VAP-BELT-SUP-SAND-WEIR-GUIDE-RAIL (NP BAF)~~	
31			~~SEAL-STR-(NO. ———) Zn-ANODE~~	
32				
33	ACCESSORIES		~~TEST RING-ANCHOR-SLID PL (SHIM PL) (NAME PL)~~	
34			~~MATE FLG & GSKT (JACK SCREW)~~ (EARTHLUG)	
35			~~(LIFT LUG FOR CHANNELS)~~ (INSUL. SUPPORT)	
36	SPARE PARTS			

	MATERIALS			CA(in)
SHELL SIDE	CHAN/PADS		CA240-TP304 / CA312-TP304	0
	COVER (HEAD)		CA240-TP304	0
	FLG	CV E		—
		STAT	SA240-TP304 / SA182-F304	—
	PASS PTN P			—
	NZL NECKS		CA312-TP304 (S) / SA182-F304 (CW)	0
	NZL FLG		SA105 + SA403 WP 304 SW BND	—
	CPLG/PLUG			—
CHANNEL SIDE	SHL/PADS		CA312-TP304 / CA312-TP304	1/16"
	SHL CV/RNG			—
	FLG	STAT		—
		CV E		—
	SHL CV FLG			—
	NZL NECKS		CA312-TP304	1/16"
	NZL FLG		CA105	—
	CPLG/PLUG			—
	EXP JOINT			
TUBE BUNDLE	TUBES		CA312-TP304	0
	TUBESHT		CA240-TP304 / CA240-TP304 CLAD	1/16"
	CROSS BAF		SS41	—
	TIE RODS		SS41	—
	SPACERS		SGP	—
	FLT HD CV			—
	FLT HD FLG			—
	BACK DEVICE			—
	LONG BAF			—
BOLTS/NUTS	CHAN CV E		B ——— N ———	
	STAT END		CA193-GR.B7 / CA194-GR.2H	
	SHL CV E			
	FLT HEAD			
	NZL FLG (C)			
	NZL FLG (S)		CA193-GR.B7 / CA194-GR.2H	
GASKETS	CHAN (ST/CV)		NON-ASB. SHEET 0.8 t	
	SHL (ST/CV)			
	FLT HEAD			
	NZL (CHAN)			
	NZL (SHL)		1/8" 150 or EQ.	
	SDL or LUG/PAD		SS41 / CA516-GR.60	

REMARKS:

— SEE ATTACHED SHEET —

	NOZZLES & OPENINGS									
38/39	MARK	NOM DIA	NO.	FLANGE RATING	FLANGE TYPE	FLANGE FACE	WALL THK	REINF PAD	DIST from CL	SERVICE
40	N.1	6"	1	ANSI 150#	WN	RF	Sch 80			N2 IN
41	N.2	6"	1	ANSI 150#	WN	RF	Sch 80			BRINE OUT
42	N.3	6"	1	ANSI 300#	WN	RF	Sch 80			PR IN
43	N.4	6"/4"	1	ANSI 300#	WN	RF	Sch 80			PR OUT
44	N.5	3"	1	ANSI 300#	WN	RF	Sch 80			DRAIN PRIMD FLG
45	N.6	4"	1	ANSI 300#	WN	RF	Sch 80			PR OUT
46	N.7	3/4"	1	ANSI 300#	LWN	RF	—			DRAIN
47										
48										
49										
50										
51										

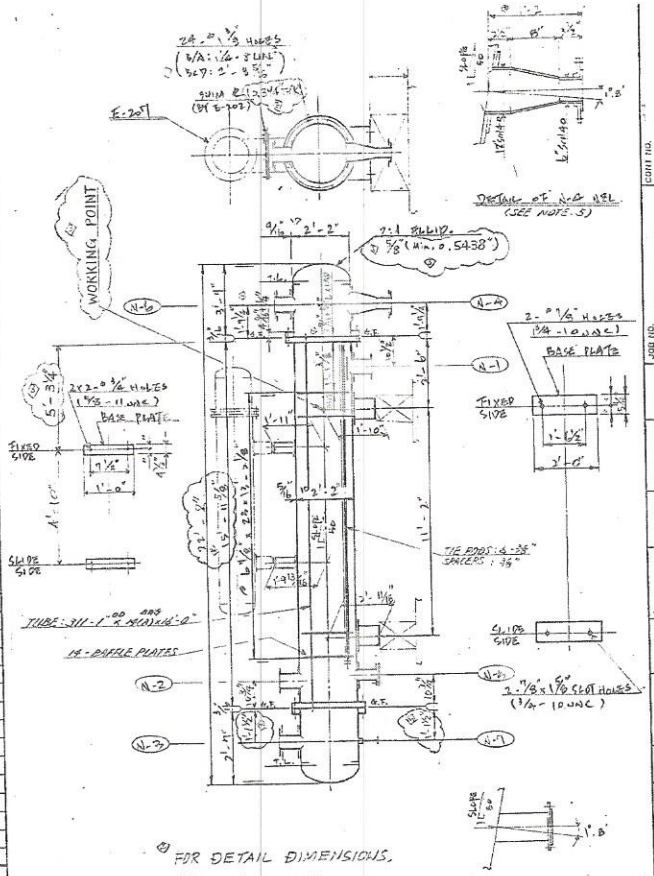

FOR DETAIL DIMENSIONS, SEE SHEET 5.

WEIGHT OF E-203					
ERECTION	1900 LB	OPERATING (MAX)	2500 LB	TUBE BUNDLE	400 LB
EMPTY	2100 LB	FULL WATER	2600 LB		
WEIGHT (ONLY) OF E-203					
ERECTION	1900 LB	OPERATING (MAX)	2500 LB		

CONT NO.					
DWG NO.					
JOB NO.	FIG. 5.01				
JOB CODE					
		DATE	APPD	DATE	CHKD	DATE	BY	REV

MITSUI ENGINEERING & SHIPBUILDING CO., LTD.

SHELL 1

REQD NO.

2ND REACTOR OVHD CONDENSER

WEE NO. E-202

1121E (J) (1.0x0) 92.01

MITSUI ENGINEERING & SHIPBUILDING CO., LTD.	I-202 2ND REACTOR OVHD CONDENSER	CUST
		LOC
		UNIT
		JOB NO. HC6401

SHELL ID : 2'-2"
TUBE OD : 1"
TUBE PITCH : 1 1/4"
TUBE NO. : 311

NO. OF PASS : TUBE - 1
SHELL - 1
TIE ROD : 6 - 3/8" (3/8-13UNC)
O.T.L : 2'-15/16"

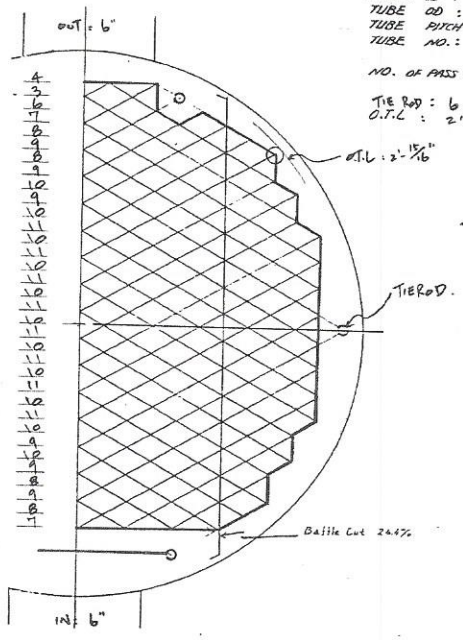

TUBE LAYOUT

◇						DOC NO. ◇
◇						SHEET NO. 2 OF 5
◇						

MITSUI ENGINEERING & SHIPBUILDING CO., LTD.	E-202 2ND REACTOR OVHD CONDENSER	LOC UNIT JOB NO. H2560

NOTE :

1. CRITICAL TEMPERATURE : 2 °F (SHELL SIDE)
2. NECESSITY OF EXPANSION JOINT IS DECIDED BY VENDOR.
3. ALL WELD SEAMS IN TUBE SIDES SHALL BE FLUSH WITH SURFACE OF SHELL.
4. EXPANSION JOINT DESIGN TEMPERATURE. (°F)

	SHELL SIDE	TUBE SIDE
CASE-1 (OPER.)	91.4	100.8
CASE-2 (COOLING WATER INLET AT 50°F)	55.4	93.4

5. ALL NOZZLES AND SADDLES SHALL BE INSTALLED VERTICALLY TO THE HORIZON
6. LINED GIRTH FLANGE SHALL HAVE A TEST HOLE AND BE TESTED AT THE AIR PRESSURE AT 50 PSIG.

◇					DOC NO. ◇
◇					SHEET NO. 3 OF 5
◇					

E-202

2ND REACTOR OVHD CONDENSER

DETAIL OF TUBE TO TUBESHEET JOINT

ATTACHMENT OF TUBE TO TUBESHEET FOR INLET SIDE
SHALL CONFORM TO THE CONSTRUCTION DESCRIBED BELOW:

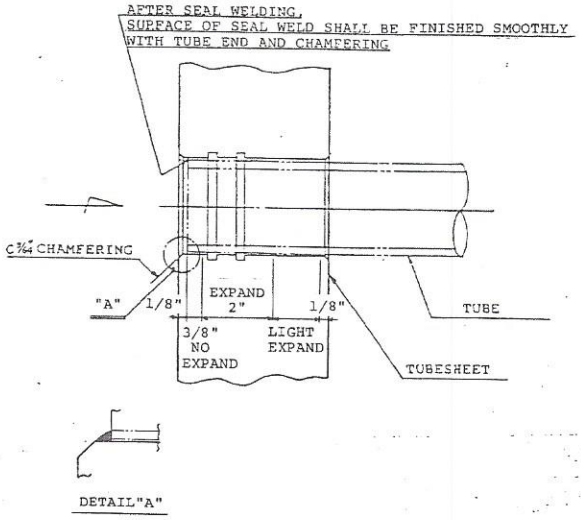

DETAIL"A"

MITSUI ENGINEERING & SHIPBUILDING CO. LTD.

MITSUI ENGINEERING & SHIPBUILDING CO., LTD.	E-202 2nd REACTOR MHD CONVERTER	CUST LOC UNIT JOB NO. HC5601

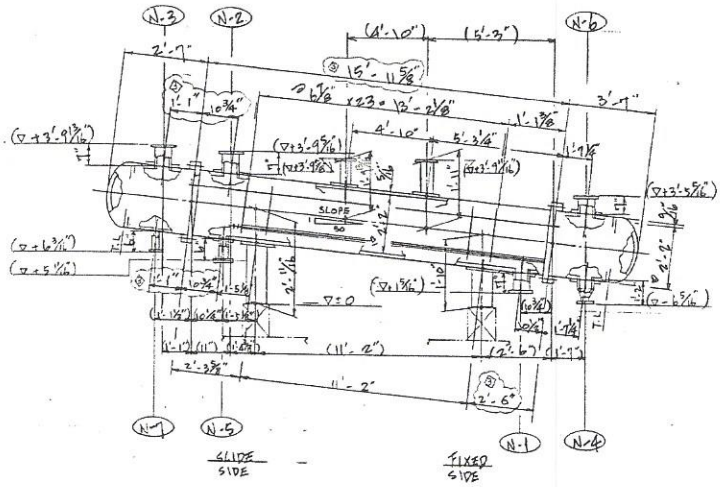

Dimensions in ( ) are for reference for piping design.

DETAIL DIMENSIONS FOR INCLINED SHELL

◇						DOC NO.
◇						

MITSUI ENGINEERING & SHIPBUILDING CO., LTD
ENGINEERING & CONSTRUCTION HEADQUARTERS

CUSTOMER ADVANCED POLYPRO RESINS, INC.	JOB NO HC5401
CONTRACT NO.	DOC NO 21-QT2103-02 ◇0
PROJECT APPF PROJECT	JOB CODE
LOCATION MARYSVILLE, MICHIGAN, U.S.A	TOTAL SHEET 45 SHEETS

QC DOSSIER

(TEST & INSPECTION REPORT)

MITSUI ENG. & SHIPBLDG. CO., LTD. 1988 -0 -23 ENG. & CONST. HDQRS.

MANUFACTURER	DOOSAN MFG. CO., LTD., KOREA
JOB NAME	APPF PROJECT
ITEM NAME	2ND. REACTOR OVHD CONDENSER
ITEM NO.	E-202
ORDER NO.	H01066
QUOT.RE.NO.	21-PR2103

VENDOR's Signature & Seal

REV	BY	DATE	CHKD	DATE	CHKD	DATE	APPD	DATE
◇								
◇								
◇0	H. Hatate				[illegible]	1989 05-21	M. Kuwahara	1989 05-21

☐ APPROVAL ☐ CONSTRUCTION ☐ REFERENCE ☒ RELEASED
☐ REVIEW ☐ AS BUILT DR'G ☐ PRELIMINARY ☐

DISTRIBUTION:

APR 13

FORM U-1 MANUFACTURERS' DATA REPORT FOR PRESSURE VESSELS

E-202

as required by the provisions of the ASME Code rules, Section VIII, Division 1

1. Manufactured and certified by DOOSAN MANUFACTURING CO., LTD. BYUENG JUM PLANT ; #465-2 BYUENGJUM-RI, TAEAN-MYUN, HWASUNG-GUN, KYUNGGI-DO, 170 KOREA (name and address of manufacturer)

2. Manufactured for MITSUI ENGINEERING & SHIPBUILDING CO., LTD. ; TOKYO JAPAN (name and address of purchaser)

3. Location of installation ADVANCED POLYPRO RESINS, INC. ; 6600 EAST FIFTEEN MILE ROAD STERLING HEIGHTS, MICHIGAN 48077, U.S.A. (name and address)

4. Type: HORIZ. H/E (horiz. or vert., tank) U104-28 (mfr's. serial no.) N/A (CRN) GC-HE1-05389 REV.3 (drawing no.) 35 (Nat'l. Bd. no.) 1987 (year built)

5. The chemical and physical properties of all parts meet the requirements of material specifications of the ASME BOILER AND PRESSURE VESSEL CODE. The design, construction and workmanship conform to ASME Code, Section VIII, Division 1: 1983 EDITION (year),

W-'85-ADDENDA (addenda date) N/A (Code Case no.) N/A (special service per UG 120(d))

Items 6-11 inclusive to be completed for single wall vessels, jackets of jacketed vessels, or shells of heat exchangers.

6. Shell: SA-516 GR.60 (mat'l. (spec. no., grade)) .3125" (nom. thickness (in.)) .0625" (corr. allow. (in.)) 2'-2" (dia. ID (ft. & in.)) 15'-11" (length (overall) (ft. & in.))

7. Seams: DBL.BUTT (long. (dbl., sngl.)) SPOT (RT (spot or full)) 85 (eff. (%)) N/A (HT temp. (°F)) N/A (time) DBL.BUTT (girth (dbl., sngl.)) SPOT. (RT(spot, partial, or full)) 2 (no. of courses)

8. Heads: (a) N/A (mat'l. (spec. no., grade)) (b) N/A (mat'l. (spec. no., grade))

	Location (top, bottom, ends)	Minimum Thickness	Corrosion Allowance	Crown Radius	Knuckle Radius	Elliptical Ratio	Conical Apex Angle	Hemispherical Radius	Flat Diameter	Side to Pressure (convex or concave)
(a)	N/A									
(b)	N/A									

If removable, bolts used (describe other fastenings): N/A (mat'l., spec. no., gr., size, no.)

9. Type of jacket: N/A Proof test: N/A

10. Jacket closure: N/A (describe as ogee & weld, bar, etc.) If bar, give dimensions: N/A If bolted, describe or sketch.

11. MAWP: 85PSIG (psi) at max. temp. 140°F (°F) Min. temp.: N/A (when less than -20°F) Hydro., ~~pneu.~~ test press.: 128 PSIG (psi)

Items 12 and 13 to be completed for tube sections.

12. Tubesheets: (CLAD) SA-105+SA-240GR.304 (stationary mat'l. (spec. no., gr.)) 25.875"I.D (dia. (in.) (subject to pressure)) 3.750" (nom. thickness (in.)) .0625"+0" (corr. allow. (in.)) WELDED (attachment (welded, bolted))

N/A (floating mat'l. (spec. no., gr.)) N/A (dia. (in.)) N/A (nom. thickness (in.)) N/A (corr. allow. (in.)) N/A (attachment)

13. Tubes: SA-213GR.TP304 (mat'l. (spec. no., gr.)) 1" (OD (in.)) .083" (nom. thickness (in. or gauge)) 311 (no.) STRAIGHT (type (straight or U))

Items 14-17 inclusive to be completed for inner chambers of jacketed vessels or channels of heat exchangers.

14. Shell: SA-240 GR.304 (mat'l. (spec. no., gr.)) .5625" (nom. thickness (in.)) NONE (corr. allow. (in.)) 2'-2" (dia. ID (ft. & in.)) L:2'-7" R:3'-7" (length (overall) (ft. & in.))

15. Seams: SNGL.BUTT (long. (dbl., sngl.)) SPOT (RT (spot or full)) 85 (eff. (%)) N/A (HT temp. (°F)) N/A (time) SNGL.BUTT (girth (dbl., sngl.)) SPOT (RT (spot, partial, or full)) L:1, R:1 (no. of courses)

16. Heads: (a) SA-240 GR.304 (mat'l. (spec. no., grade)) (b) SA-240 GR.304 (mat'l. (spec. no., grade))

	Location (top, bottom, ends)	Minimum Thickness	Corrosion Allowance	Crown Radius	Knuckle Radius	Elliptical Ratio	Conical Apex Angle	Hemispherical Radius	Flat Diameter	Side to Pressure (convex or concave)
(a)	L-END	.544"	NONE	N/A	N/A	2:1	N/A	N/A	N/A	CONCAVE
(b)	R-END	.544"	NONE	N/A	N/A	2:1	N/A	N/A	N/A	CONCAVE

If removable, bolts used (describe other fastenings) N/A (mat'l., spec. no., gr., size, no.)

17. MAWP: 638PSIG (psi) at max. temp. 167°F (°F) Min. temp.: N/A (when less than -20°F) Hydro., ~~pneu.~~ test press.: 957 PSIG (psi)

Items on reverse side to be completed for all vessels where applicable.

FORM U-1 (back)

E-202

18. Nozzles, Inspection and safety valve openings:

Purpose (inlet, outlet, drain, etc.)	Number	Dia. or Size	Type	Mat'l	Nom. Thickness	Reinforcement Material	How Attached	Location
CCW IN	1	6"	CL150FLG	SA-106GR.B	.432"	INTEGRAL	WLD.	-
RCCW OUT	1	6"	CL150FLG	SA-106GR.B	.432"	INTEGRAL	WLD.	-
PR IN	1	6"	CL300FLG	SA-312GR.TP304	.280"	SA-240GR.TP304	WLD.	-
PR OUT	1	12"	CL300FLG	SA-312GR.TP304	.406"	SA-240GR.TP304	WLD.	-
DRAIN	1	3"	CL150FLG	SA-106GR.B	.300"	SA-516GR.60	WLD.	-
PR OUT	1	4"	CL300FLG	SA-312GR.TP304	.237"	SA-240GR.TP304	WLD.	-
DRAIN	1	3/4"	CL300LWN	SA-182GR.F304	.563"	INTEGRAL	WLD.	-

19. Supports: Skirt NO (yes or no) Lugs N/A (no) Legs N/A (no) Other SADDLE (describe) Attached WELDED TO SHELL (where and how)

20. Remarks: Manufacturers' Partial Data Reports properly identified and signed by Commissioned Inspectors have been furnished for the following items of the report: N/A (name of part, item number, mfr's. name and identifying stamp)

* INSP. OPENING : UG-46(a)

* BOLTED TYPE BODY FLG : SA-105, BOLTING MAT'L:SA-193GR.B7;1.250"-8NxL12.5";48EA

CERTIFICATE OF SHOP COMPLIANCE

We certify that the statements made in this report are correct and that all details of design, material, construction and workmanship of this vessel conform to the ASME Code for Pressure Vessels, Section VIII, Division 1.

"U" Certificate of Authorization no. 18148 expires 12/15, 19 88

Date 2/25/1987 Name DOOSAN MANUFACTURING CO., LTD. BYUENG JUM PLANT (manufacturer) Signed (representative) (S.W.LEE)

CERTIFICATE OF SHOP INSPECTION

Vessel constructed by DOOSAN MFG. CO., LTD. BYUENGJUM PLANT at #465-2 BYUENGJUM-RI TAEAN-MYUN HWASUNG-GUN, KYUNGGI-DO, 170 KOREA

I, the undersigned, holding a valid commission issued by The National Board of Boiler and Pressure Vessel Inspectors and the state or province of ILLINOIS and employed by THE HARTFORD STEAM BOILER I & I COMPANY of HARTFORD CONN. have inspected the pressure vessel described in this Manufacturers' Data Report on FEB. 25, 19 87, and state that, to the best of my knowledge and belief, the manufacturer has constructed this pressure vessel in accordance with ASME Code, Section VIII, Division 1.

By signing this certificate neither the inspector nor his employer makes any warranty, expressed or implied, concerning the pressure vessel described in the Manufacturers' Data Report. Furthermore, neither the inspector nor his employer shall be liable in any manner for any personal injury or property damage or a loss of any kind arising from or connected with this inspection.

Date 2/25/1987 Signed (Authorized Inspector) Commissions N.B #10128 (Nat'l. Bd. ~~(incl. endorsements) state, prov. and no.~~)

CERTIFICATE OF FIELD ASSEMBLY COMPLIANCE (N/A)

We certify that the field assembly construction of all parts of this vessel conforms with the requirements of Section VIII, Division 1 of the ASME BOILER AND PRESSURE VESSEL CODE.

"U" Certificate of Authorization no. _____ expires _____, 19 ____

Date _____ Name _____ (assembler that certified and constructed field assembly) Signed _____ (by representative)

CERTIFICATE OF FIELD ASSEMBLY INSPECTION (N/A)

I, the undersigned, holding a valid commission issued by The National Board of Boiler and Pressure Vessel Inspectors and the state or province of _____ and employed by _____ of _____ have compared the statements in this Manufacturers' Data Report with the described pressure vessel and state that parts referred to as data items _____, not included in the certificate of shop inspection, have been inspected by me and that to the best of my knowledge and belief, the manufacturer has constructed and assembled this pressure vessel in accordance with ASME Code, Section VIII, Division 1. The described vessel was inspected and subjected to a hydrostatic test of _____ psi.

By signing this certificate neither the inspector nor his employer makes any warranty, expressed or implied, concerning the pressure vessel described in the Manufacturers' Data Report. Furthermore, neither the inspector nor his employer shall be liable in any manner for any personal injury or property damage or a loss of any kind arising from or connected with this inspection.

Date _____ Signed _____ (Authorized Inspector) Commissions _____ (Nat'l. Bd. (incl. endorsements) state, prov. and no.)

TABLE OF CONTENTS

ITEM NO.: E 292

- TABULATION OF MATERIAL
- MATERIAL TEST REPORT
- NON DESTRUCTIVE EXAMINATION RECORD
  - LIQUID PENETRANT TEST
  - RADIOGRAPHIC TEST
  - NDE SKETCH SHEET
- VISUAL / DIMENSION RECORD
  - ASSEMBLY DIMENSION / VISUAL INSPECTION RECORD
  - STANDARD TOLANCE CHART
  - M/HOLE, H/HOLE, NOZZLE DIMENSION AND/OR ORIENTATION RECORD
  - SADDLE DIMENSION REPORT
- HYDROSTAC TEST RECORD
- PNEUMATIC TEST RECORD
- LEAK TEST RECORD FOR PADS

TABULATION OF MATERIALS
재 료 사 용 일 람 표

PROJECT NAME /공사명	PROJECT NO. /공사번호	VESSEL NO. /용기번호	CUSTOMER /주 문 주	QC SECTION CHIEF /품질관리과장	A.I. /공인검사관
APPT PROJ.	86C-HESC-046	E-202	MES.		N/A

PART NAME 부 품 명	DRAWING NO. 도 면 번 호	REF. NO.	Q'TY 수량	MATERIAL 재 질	MATERIAL I.D NO. 자재식별번호	HEAT NO. 열 번 호	EXAMINER 검 사 원 ST	M/S 식별표시이동 ST	M/S 식별표시이동 ST	~~FINAL CHECK~~ ~~최종확인~~ MTR NO.
SHELL	GC-HEI-05389	1	1	SA516-60 5/16"	046-05-7	S49641	TRV-E202-3A			18
CHANNEL		2	1	SA240-304 9/16"	046-07-9	bY90944	TRV-E202-3A			6
"		3	1	"	046-07-9	bY90944	TRV-E202-3A			6
CHAN. FLG.		5	2	SA105 5/8"	046-09-2	b33	TRV-E202-3A			85
HEAD PLATE.		6	2	SA240-304 5/8"	046-07-10	bX91220	TRV-E202-3A			7
WEB "		7-1	1	SS41 0.354"	N/A	X68391	TRV-E202-3A			-
WEB "		2	1	"	N/A	X68391	TRV-E202-3A			-
WEAR "		3	2	SA516-60 3/8"	046-05-5	X70907	TRV-E202-3A			15
WEB "		9-1	1	SS41 0.236"	N/A	F04123	TRV-E202-3A			-
WEB "		-2	1	"	N/A	F04123	TRV-E202-3A			-

REMARKS /비 고 ~~[illegible]~~

Reviewed by: K. Ishida
24-04-'89 ICT Inspector

M/S: MARK SHIFT 식별표시이동

ST: SHOP TRAVELLER 작업진행표

11-MP-11
82. 08. 06

DOOSAN MANUFACTURING CO., LTD.

TABULATION OF MATERIALS
재 료 사 용 일 람 표

PROJECT NAME /공사명	PROJECT NO. /공사번호	VESSEL NO. /용기번호	CUSTOMER /주 문 주	QC SECTION CHIEF/품질관리과장	A.I. /공인검사관
APPF PROJ.	86C-MESC-046	E-202	MES		N/A

PART NAME 부 품 명	DRAWING NO. 도 면 번 호	REF. NO.	Q'TY 수량	MATERIAL 재 질	MATERIAL I.D NO. 자재식별번호	HEAT NO. 열 번 호	EXAMINER 검 사 원 ST	M/S 식별표시이동 ST	M/S 식별표시이동 ST	~~FINAL CHECK 최 종 확 인~~
WEAR PLATE.	GC-HE1-05389	9-3	2	SA516-60 1/4"	046-05-8	F66949	TRV-E202-3A			14
STUD BOLT/NUT.		11	48	SA193-B7/1M4-2H 1 1/2"-8UNC X12 1/2"	N/A	692226 A0041	TRV-E202-3A			141, 145
LINING PLATE		14	2	SA240-304 5/16"	046-09-4	6X91255	TRV-E202-3A			9
TUBE SHEET		16	2	SA516-70+SA240-304 3 9/16" + 5/16" CLAD	046-08-2	55883	TRV-E202-3A			52, 53, 62 63, 69, 71, 72
TUBE		21	311	SA213-304 0.75" OUTSIDE 14 (AVG)	046-01-1	E62200	TRV-E202-3A			48,
LIFTING LUG.		22	4	SA516-70 (N) 13/16"	046-04-6	548404	TRV-E202-3A			21
PAD		24	4	SA240-304 9/16"	046-09-9	6X90964	TRV-E202-3A			6
INSUL. WIRE PIECE		25	1	SA240-304 1/4"	046-09-3	6X90837	TRV-E202-3A			—
6" NOZ. FLG.	GC-HE2-10816	1-1	1	SA105 6" 150 WNRF.	046-12-9	682	TRV-E202-3A			103
NECK		-2	1	SA106-B 6" SCH. 80.	046-03-6	N7331b	TRV-E202-3A			44

REMARKS /비 고

M/S: MARK SHIFT 식별표시이동

ST: SHOP TRAVELLER 작업진행표

TABULATION OF MATERIALS
재 료 사 용 일 람 표

PROJECT NAME /공사명	PROJECT NO. /공사번호	VESSEL NO. /용기번호	CUSTOMER /주 문 주	QC SECTION CHIEF/품질관리과장	A.I. /공인검사관
APPF PROJ.	86C-HESC-046	E - 202	HES.		N/A

PART NAME 부 품 명	DRAWING NO. 도 면 번 호	REF. NO.	Q'TY 수량	MATERIAL 재 질	MATERIAL I.D NO. 자재식별번호	HEAT NO. 열 번 호	EXAMINER 검 사 원 ST	M/S 식별표시이동 ST	M/S 식별표시이동 ST	~~FINAL CHECK~~ ~~최 종 확 인~~
6" NOZ. REINF. PA	GC-HE2-10816	1-3	1	SA516-60 5/16"	046-05-7	S49647	TRV-E-202-3A	Delete		18
6" NOZ. FLG.		2-1	1	SA105 6" #150 WNRF.	046-12-9	682	TRV-E-202-3A			103
NECK		-2	1	SA106-B 6" SCH.80	046-03-6	N73316	TRV-E-202-3A			44
REINF. PAD		-3	1	SA516-60 5/16"	046-05-7	S49647	TRV-E-202-3A	Delete		18
6" NOZ. FLG.		3-1	1	SA105 6" #300 LJ REF.	046-12-75	646	TRV-E-202-3A			109
STUB END		-2	1	SA312-TP304 6" SCH 40	046-02-~~4~~ 3	E60964	TRV-E-202-3A			36
REINF. PAD		-3	1	SA240-304 9/16"	046-07-9	6Y90944	TRV-E-202-3A			6
LAP.		-4	1	SA240-304 0.28"	046-07-9	6Y90944	TRV-E-202-3A			6
FLANGE.		4-1	1	SA105 6" #300 LJ REF.	046-13-34	646	TRV-E-202-3A			109
STUB END.		-2	1	SA312-304 6" SCH.40.	046-02-~~4~~ 3	E60964	TRV-E-202-3A			36

REMARKS /비 고

M/S: MARK SHIFT 식별표시이동

ST: SHOP TRAVELLER 작업진행표

TABULATION OF MATERIALS
재 료 사 용 일 람 표

PROJECT NAME /공사명	PROJECT NO. /공사번호	VESSEL NO. /용기번호	CUSTOMER /주 문 주	QC SECTION CHIEF/품질관리과장	A.I. /공인검사관
APPF PROJ.	86C-MESC-046	E-202	MES.		N/A

PART NAME 부 품 명	DRAWING NO. 도 면 번 호	REF. NO.	Q'TY 수량	MATERIAL 재 질	MATERIAL I.D NO. 자재식별번호	HEAT NO. 열 번 호	EXAMINER 검 사 원 ST	M/S 식별표시이동 ST	M/S 식별표시이동 ST	~~FINAL CHECK 최 종 확 인~~
REDUCER	GC-HE2-10816	4-3	1	SA403-WP304 12"x6" SCH.40.	046-11-1	065054	TRV-E202-3A			1≥5
NECK		-4	1	SA312-TP304 12" SCH.40.	046-02-1	E62842	TRV-E202-3A			≥5
REINF. PAD		-5	1	SA240-304 9/16"	046-07-9	bY90944	TRV-E202-3A			6
LAP		-6	1	SA240-304 0.28"	046-05-9	bY90944	TRV-E202-3A			6
FLANGE.		5-1	1	SA105 3" #150 WNRF.	046-12-15	—	TRV-E202-3A			—
NECK		-2	1	SA106-B 3" SCH.80	046-03-9	M07732	TRV-E202-3A			—
REINF. PAD.		-3	1	SA516-60 5/16"	046-05-7	S49647	TRV-E202-3A			—
BLD FLG.		-5	1	SA105 3" #150 BLD RF.	046-13-39	—	TRV-E202-3A			—
4" NOZ. FLG.		6-1	1	SA105 4" #300 LJRF.	046-12-77	—	TRV-E202-3A			—
STUB END		-2	1	SA312-304 4" SCH.40	046-12-77	A580101	TRV-E202-3A			—

REMARKS /비 고

M/S: MARK SHIFT 식별표시이동

ST: SHOP TRAVELLER 작업진행표

TABULATION OF MATERIALS
재 료 사 용 일 람 표

PROJECT NAME /공사명	PROJECT NO. /공사번호	VESSEL NO. /용기번호	CUSTOMER /주 문 주	QC SECTION CHIEF/품질관리과장	A.I. /공인검사관
APPF PROJ.	86C-HESC-046	E-202	MES.	2/22	N/A

PART NAME 부 품 명	DRAWING NO. 도 면 번 호	REF. NO.	Q'TY 수량	MATERIAL 재 질	MATERIAL I.D NO. 자재식별번호	HEAT NO. 열 번 호	EXAMINER 검 사 원 ST	M/S 식별표시이동 ST	M/S 식별표시이동 ST	~~FINAL CHECK 최 종 확 인~~
℄ NOZ. LAP	GC-HE2-10816	6-3	1	SA240-304 0.297"	N/A	6x90944	TRV-E202-3A			—
REINF. PAD		-4	1	SA240-304 9/16"	046-09-9	6x90944	TRV-E202-3A			—
FLG.		-5	1	SA182-F304 3/4" 150# LWNRF.	046-12-38	—	TRV-E202-3A			—

REMARKS /비 고

M/S: MARK SHIFT 식별표시이동

ST: SHOP TRAVELLER 작업진행표

11-MP-11
82. 08. 06

DOOSAN MANUFACTURING CO., LTD.

No 29

Nippon Metal Industry Co., Ltd.

INSPECTION CERTIFICATE

CoupleSwan

NTK STAINLESS STEEL

CUSTOMER SANSUI SHOJI CO.,LTD.

DESTINATION R KOREA

SPECIFICATION ASTM A 240

CUSTOMER ORDER MVH-8462

INVOICE 120068-1

DATE DEC. 15 . 1986

No	CASE	TYPE	FINISH	SIZE	HEAT No.	QUANTITY	Weight in Kg	
1		304	NO.1	1/4I x 5F x 10F	6X90837	12		GOOD
2		304	NO.1	1/4I x 5F x 10F	6X91464	1	3,212	GOOD
3				(ID NO. 5046-09-3)				
4								
5								

~~IDENTICAL WITH ASME SEC~~ ~~PART A~~ ~~SA-240-304~~
~~ED UP TO~~ AS ~~DATE~~ ADD.

No	CHEMICAL ANALYSIS OF HANDLE TEST (%)								Tensile Strength	Yield Strength 0.2% offset	Elongation	Hardness
	C	Si	Mn	P	S	Ni	Cr	N	KSI	KSI	%	HB
MAX	0.08	1.00	2.00	0.045	0.030	10.50	20.00	0.10				202
MIN						8.00	18.00		75	30	40	
1	0.05	0.53	1.08	0.031	0.014	8.51	18.15	0.05	94	45	60	177
2	0.06	0.62	0.99	0.030	0.002	8.57	18.16	0.05	93	43	60	174
3												
4												
5												

~~Approved~~
Reviewed by: H. Nakata
11-03-87 MLD Inspector

COMPARED WITH ORIGINAL

REVIEWED BY A.I.

We hereby certify that the material herein described has been manufactured in accordance with the standards and specification specified by the Customer and Satisfactory requirements.)

NOTE SOLUTION HEAT TREATMENT...1100°Cx3MIN.W.Q.
(2012°F)

NIPPON METAL INDUSTRY CO., LTD. TEL
SAGAMIHARA WORKS 0427(72)51

N. Kawaoto
MANAGER OF Q.A. DEPARTMENT

No. 8

Nippon Metal Industry Co., Ltd.

INSPECTION CERTIFICATE

Couple Swan

NTK STAINLESS STEEL

CUSTOMER: SANSUI SHOJI CO., LTD.

DESTINATION: R KOREA

SPECIFICATION: ASTM A 240

CUSTOMER ORDER: MVH-8462

INVOICE: 120087-1

DATE: DEC. 15, 1986

No	CASE	TYPE	FINISH	SIZE	HEAT No.	QUANTITY	Weight in Kg	
1		304	NO.1	9/16I x 5F x 10F	6Y90944	1	543	GOOD
2				(ID No. 086-09-9)				
3								
4								
5								

IDENTICAL WITH ASME SEC. I PART A SA240-304 ED. UP TO 1983.

No	CHEMICAL ANALYSIS OF LADLE TEST (%)								Tensile Strength KSI	Yield Strength 0.2% offset KSI	Elongation %	Hardness HB
	C	Si	Mn	P	S	Ni	Cr	N				
MAX	0.08	1.00	2.00	0.045	0.030	10.50	20.00	0.10				
MIN						8.00	18.00		75	30	40	202
1	0.06	0.70	0.95	0.028	0.004	8.57	18.24	0.05	91	41	60	165
2												
3												
4												
5												

Reviewed by: H. Watabe 14-03-87 NDT Inspector

REVIEWED BY A.I.

COMPARED WITH ORIGINAL

We hereby certify that the material herein described has been manufactured in accordance with the standards and specification specified by the Customer and Satisfactory requirements.

NOTE

SOLUTION HEAT TREATMENT...1100°C×4MIN.W.Q.
(2012°F)

NIPPON METAL INDUSTRY CO., LTD. TEL.
SAGAMIHARA 0427(72)51

M. Kawata
MANAGER OF Q.A. DEPARTMENT

Nippon Metal Industry Co., Ltd.

Couple Swan

No 36

INSPECTION CERTIFICATE

CUSTOMER SANSUI SHOJI CO., LTD.

DESTINATION R KOREA

SPECIFICATION ASTM A 240

CUSTOMER ORDER MVR-8462

INVOICE 120075-1

DATE DEC. 15 , 1986

NTK STAINLESS STEEL

No	CASE	TYPE	FINISH	SIZE	HEAT No.	QUANTITY	Weight in Kg	
1		304	NO.1	5/8I x 4F x 8F	6X91220	1	369	GOOD
2				(016-09-10)				
3				STICAL WITH ASME SECT. II PART A SA240-304				
4				ED. UP TO ADD. 2.12.16				
5								

No	CHEMICAL ANALYSIS OF LADLE TEST (%)								Tensile Strength	Yield Strength 0.2% offset	Elongation	Hardness
	C	Si	Mn	P	S	N	Cr	N	KSI	KSI	%	HB
MAX	0.08	1.00	2.00	0.045	0.030	10.5	20.00	0.10				202
MIN						8.0	18.00		75	30	40	
1	0.07	0.60	1.02	0.032	0.006	8.5	18.18	0.05	87	38	63	159
2												
3												
4												
5												

REVIEWED BY A.I.

Reviewed by: N. Nath
MES Inspector

COMPARED WITH ORIGINAL
3/21/87

We hereby certify that the material herein described has been manufactured in accordance with the standards and specification specified by the Customer and Satisfactory requirements.

NOTE SOLUTION HEAT TREATMENT...1100°C x 4MIN. W.Q. (2012°F)

NIPPON METAL INDUSTRY CO., LTD. TEL.
SAGAMIHARA 0427(72)515

N. Kawabata
MANAGER OF Q.A. DEPARTMENT

No. 32

Nippon Metal Industry Co., Ltd.

INSPECTION CERTIFICATE

CoupleSwan

NTK STAINLESS STEEL

CUSTOMER: SANSUI SHOJI CO., LTD.

DESTINATION: R KOREA

SPECIFICATION: ASTM A 240

CUSTOMER ORDER: MVH-8462

INVOICE: 120071-1

DATE: DEC. 15 1986

No.	CASE	TYPE	FINISH	SIZE	HEAT No.	QUANTITY	Weight in Kg	
1		304	NO.1	5/16I x 5F x 20F	6X91255	6	3,587	GOOD
2				(ID NO. 04b-07-4)				
3								
4								
5								

TICAL WITH ASME SECT. I PART A SA-240-304

ED. UP TO ~~WAR~~ ADD.

No.

CHEMICAL ANALYSIS OF LADLE TEST (%)

	C	Si	Mn	P	S	Ni	Cr	N			Tensile Strength KSI	Yield Strength 0.2% offset KSI	Elongation %	Hardness HB
MAX	0.08	1.00	2.00	0.045	0.030	10.50	20.00	0.10						
MIN						8.00	18.00							202
1	0.07	0.59	1.00	0.032	0.009	8.52	18.26	0.06			75	30	40	
2											92	43	60	168
3														
4														
5														

REVIEWED BY A.I

~~Witnessed~~, Reviewed by: 11-03-87 Nippon Inspector

COMPARED WITH ORIGINAL

We hereby certify that the material herein described has been manufactured in accordance with the standards and specification specified by the Customer (Satisfies requirements.)

NOTE: SOLUTION HEAT TREATMENT...1100°Cx3MIN.W.Q. (2012°F)

NIPPON METAL INDUSTRY CO., LTD. TEL.
SAGAMIHARA AREA 0427(72)5151

MANAGER OF Q.A. DEPARTMENT

계약번호 CONTRACT NO : LPPC408J

수요번호 ORDER NO :

품명 COMMODITY : PLATE

제품규격 SPECIFICATION : ASTM A516-60

열연 후판 검사증명서
MILL TEST CERTIFICATE

포항종합제철주식회사
POHANG IRON & STEEL CO. LTD
5, DONG CHON DONG, POHANG CITY, KYUNGSANG BUK DO, KOREA

수요가 CUSTOMER : DOOSAN MFG.

공급자 SUPPLIER : DOOSAN MFG.

증명서번호 CERTIFICATE NO : 86-PP-1016-018-001

발행일자 DATE OF ISSUE : OCT. 16. 1986

C:GOOD

제품치수 DIMENSIONS	수량 QUANTITY	중량 WEIGHT (KG)	제강번호 CHARGE NO	제품번호 PRODUCT NO	인장시험 TENSILE TEST YP KG/MM²	TS KG/MM²	EL %	충격 IMPACT -0	입도 GRAIN SIZE	화학성분 CHEMICAL COMPOSITION (%) C	Si	Mn	P	S	Sol Al	CEQ	REMARKS
										2			3		3	2	
1/4"X10'X18'	3	2,502	F66949	52283601-03T	42.9 (61.0KSI)	53.724 (76.4KSI)			7.5	14	26	70	23	6	39		
"	3	2,502	"	52283701-03T	41.7 (59.3KSI)	53.625 (76.2KSI)			"	"	"	"	"	"	"		
*** SUB TOTAL (060)*		6		5,004	(KG)												
*** GRADE TOTAL ***		6		5,004	(KG)												
*** GRAND TOTAL ***		6		5,004	(KG)												
(ID NO. : 046-05-8)					*** LAST ITEM ***												

U X100 : 2
N X1000 : 3
I X10000 : 4
T X100000 : 5

COMPARED WITH ORIGINAL
2/21/07

Reviewed by: Y. Natchi
11-03-07 MES Inspector

REVIEWED BY AI
Y. A. Jo 10/31/06

IDENTICAL WITH ASME SECT. II PART A, SA516-60
ED. UP TO ADD. Checked by Lot Ac. Team

WE HEREBY CERTIFY THAT THE MATERIAL HEREIN HAS BEEN MADE AND TESTED IN ACCORDANCE WITH THE ABOVE SPECIFICATION AND ALSO WITH THE REQUIREMENTS CALLED FOR BY THE ABOVE ORDER.

CHIEF OF PRODUCTS INSPECTION SECTION

계약번호 CONTRACT NO : LPPC408J

수주번호 ORDER NO :

품명 COMMODITY : PLATE

제품규격 SPECIFICATION : ASTM A516-60

열연 후판 검사 증명서
MILL TEST CERTIFICATE

수요가 CUSTOMER : DOOSAN MFG.

주문자 SUPPLIER : DOOSAN MFG.

포항종합제철주식회사
POHANG IRON & STEEL CO., LTD

증명서번호 CERTIFICATE NO : 86-PP-1104-027-001

발행일자 DATE OF ISSUE : NOV. 4. 1986

G : GOOD

제품칫수 DIMENSIONS	수량 QUANTITY	중량 WEIGHT (KG)	제강번호 CHARGE NO	제품번호 PRODUCT NO	인장시험 TENSILE TEST YP KG/MM²	TS	EL %	충격 IMPACT	입도 GRAIN SIZE	화학성분 CHEMICAL COMPOSITION (%) C	Si	Mn	P	S	Sol Al	CEQ	REMARKS
3/8"X8'X20'	4	4,444	X70907	38708601-04T	34.1 (48.5KSI)	48.931 (69.6KSI)			8	13	25	68	17	4	42		
*** SUB TOTAL (030)*		4			4,444 (KG)												
*** GRADE TOTAL ***		4			4,444 (KG)												
*** GRAND TOTAL ***		4			4,444 (KG)												
(ID NO. : 046-05-5)																	

U X100 : 2
N X1000 : 3
I X10000 : 4
T X100000 : 5

=== LAST ITEM ===

COMPARED WITH ORIGINAL

Reviewed by: Mill Inspector
11-03-87

REVIEWED BY A.I
11/21/86

IDENTICAL WITH THE ORIGINAL

WE HEREBY CERTIFY THAT THE MATERIAL HEREIN HAS BEEN MADE AND TESTED IN ACCORDANCE WITH THE ABOVE SPECIFICATION AND ALSO WITH THE REQUIREMENTS CALLED FOR BY THE ABOVE ORDER.

계약번호 CONTRACT NO : LPPC40BK

주문번호 ORDER NO :

품명 COMMODITY : PLATE

제품규격 SPECIFICATION : ASTM A516-70

열연 후판 검사증명서
MILL TEST CERTIFICATE

수요가 CUSTOMER : DOOSAN MFG.

주문자 SUPPLIER : DOOSAN MFG.

포항종합제철주식회사
POHANG IRON & STEEL CO., LTD
5, DONG CHON DONG, POHANG, KYONGSANGBUK-DO, KOREA

증명서번호 CERTIFICATE NO : 86-PP-1017-021-001

발행일자 DATE OF ISSUE : OCT. 17. 1986

G:GOOD

제품칫수 DIMENSIONS	수량 QUANTITY	중량 WEIGHT (KG)	제강번호 CHARGE NO	제품번호 PRODUCT NO	인장시험 TENSILE TEST YP KG/MM²	TS	EL %	충격 IMPACT	입도 GRAIN SIZE AGS	HEAT TREATMENT	화학성분 CHEMICAL COMPOSITION (%) C	Si	Mn	P	S	Sol Al	CU	NI	MO	V	CEQ	REMARKS
											2		3			3	2	2	2	3	2	
13/16"X10'X16'	1	2,408	S48404	S1785901	37.6 (53.5KSI)	54.7 (77.8KSI)	27		9	N	21	25	106	20	10	36	2	2	1	38		
*** SUB TOTAL (061)*		1		2,408 (KG)																		
*** GRADE TOTAL ***		1		2,408 (KG)																		
*** GRAND TOTAL ***		1		2,408 (KG)																		
04b-04-b																						

=== LAST ITEM ===

COMPARED WITH ORIGINAL
11/21/86

~~Witnessed~~
Reviewed by: H Natchi
11-03-87 NES Inspector

REVIEWED BY
8.1.1 for 10/31/86

IDENTICAL WITH ASME SECT II PART A SA516-GR70
AMENDED UP TO ~~1986~~ ADD
REVIEWED BY DOOSAN 11/03/86

WE HEREBY CERTIFY THAT THE MATERIAL HEREIN HAS BEEN MADE AND TESTED IN ACCORDANCE WITH THE ABOVE SPECIFICATION AND ALSO WITH THE REQUIREMENTS CALLED FOR BY THE ABOVE ORDER.

INSPECTOR OF PRODUCTS INSPECTION SECTION

NIPPON STEEL CORPORATION

CERTIFICATE OF INSPECTION

Head Office : 6-3, Otemachi 2-Chome
Chiyoda-ku, Tokyo, Japan

Contract No. : 6-770-N3-1-X-P815

Commodity : Welded Stainless Steel Pipe.

Specification : ASME SA312 TP304

Customer : J G C CORPORATION

Shipper : C. ITOH & CO., LTD.

Sheet No. : 6N0Y026

Date of Issue : 86-11-25

Size (OD×WT×L)	Q'ty	Weight kg	Cast No.	Mfg. No.	Specification	Tensile Test (GL=50mm) Yield Strength Ksi	Tensile Strength Ksi	Elongation %	Flattening Test	Hydrostatic Test	Dimensional & Visual Inspec.	Bend Test	Liq. dye Penetrant Exam.	Radiographic Exam.	Chemical Composition (%) C	Si	Mn	P	S	Ni	Cr				Remarks
						0.2% offset 30 min	75 min	35 min		900 Psi					8 max	75 max	200 max	40 max	30 max	1100 800	2000 1900				
N12" x Sch40S x 18F	1	409	E62842	6N0Y0261		46	87	70	G	G	G	–	–	–	5	50	83	32	3	864	1826				
04b-02-1																									
Total	1	409	Heat Treatment 1060°C Water Cooled. (1940°F) G=Good																						

REVIEWED BY

REVIEWED BY

Witnesse
Reviewed by:
11-03-87 MES Inspector

WE HEREBY CERTIFY THAT THE MATERIAL DESCRIBED HEREIN HAS BEEN MADE IN ACCORDANCE WITH THE RULES OF THE CONTRACT.

K. Takei
Manager of
PIPE & TUBE QUALITY CONTROL & TECHNICAL SERVICE DEPT.,
PIPE & TUBE TECHNICAL DIVISION

000035

NIPPON STEEL CORPORATION

CERTIFICATE OF INSPECTION

[illegible] 3, [illegible]
Chiyoda-ku, Tokyo, Japan

ntract No. : 6-770-N3-1-0-P823

nmodity : Welded Stainless Steel Pipe.

ecification : ASME SA312 TP304

Customer : J G C CORPORATION

Shipper : C.ITOH & CO., LTD.

Sheet No. : 6N06081

Date of Issue : 86-11-06

Size (OD×WT×L)	Q'ty	Weight kg	Cast No.	Mfg. No.	Specification	Tensile Test (GL=50mm) Yield Strength Ksi	Tensile Strength Ksi	Elongation %	Flattening Test	Hydrostatic Test Psi	Dimensional & Visual Insp.	Reid Test	Liq. Dye Penetrant Exam.	Radiographic Exam.	Chemical Composition (%) C	Si	Mn	P	S	Ni	Cr				Remarks
						0.2% offset 30 min	75 min	35 min							8 max	75 max	200 max	45 max	30 max	1100 min	2000 max				
NB" x Sch40S x 18F	1	236	E62728	6N900811		44	88	68	G	1100 G	G	-	-	-	5	47	83	27	[illegible]	654	3136				
N6" x Sch40S x 18F	1	157	E60964	6N900812		46	89	66	G	1300 G	G	-	-	-	7	50	87	25	3	671	2817				
8": 046-02-2																									
8": 046-02-3																									
REVIEWED BY [illegible]																									
REVIEWED BY [illegible]																									
Total	2	393	Heat Treatment 1060°C Water Cooled. (1940°F) G=Good																						

[illegible]
Mill Inspector

WE HEREBY CERTIFY THAT THE MATERIAL DESCRIBED HERE[illegible] HAS BEE[illegible]
ACCORDANCE WITH THE RULES OF THE CONTRACT.

[illegible]

NIPPON STEEL CORPORATION

INSPECTION CERTIFICATE

(MILL SHEET)

CONTRACT NO: E-772-A3-1-C-G4051L71
COMMODITY: PIPE FOR PIPING
SPECIFICATION: ASME SA-106 GRADE B-S-H
CUSTOMER: NIKKI AK
BUYER: C.ITOH
SHEET NO: 0000004281
DATE OF ISSUE: 1980-11-05
002 124

	Number	Weight KG	Cast No / Heat No	Test Piece No	Inspection No	Tensile Test AKBA XRBA YSO.SA UNDER-L PSI	Impact Test	Hardness			
				SPEC	MIN. MAX.	L2 35000 60000300				LADLE	IC 25 30. 106 40. 58.
NO*XS80X5500 04b-03-6	2	668	N73316A00135	12448		L2 49600. 76500390 G			G		LADLE G 22. 23. 74. 14. 2.
GRAND TOTAL											
NO.OF PIECES----------		2 PIECES									
WEIGHT----------		668 KG									

TENSILE TEST SPECIMEN:LONGITUDE---STRIP
HYDROSTATIC TEST
PRESSURE----------MIN 2700 PSI
HOLDING TIME----------MIN 5 SECONDS

COMPARED WITH ORIGINAL
2/21/80

Witnessed
Reviewed by: H. Hatta
11-03-80 NES Inspector

68 * NOS 2131105001

REVIEWED BY

REVIEWED BY A.I

WE HEREBY CERTIFY THAT THE MATERIAL DESCRIBED HEREIN HAS BEEN MADE IN ACCORDANCE WITH THE RULES OF THE CONTRACT.

K. Yamashita

Tawata Works

MILL CERTIFICATE

CHUBU STEEL TUBE CO., LTD.
6-15, Tsumaki 3-chome, Nishinari-ku, Osaka, 557, Japan

stomer : DOOSAN MANUFACTURING CO., LTD.

ecification : ASME SA-213 TP304-84b

tcle : SEAMLESS AUSTENITIC ALLOY STEEL BOILER, SUPERHEATER, AND HEAT-EXCHANGER TUBES

Date : OCT. 31, 1986 Sheet No. 20385-1

Order No.

Supplier : N STEEL INDUSTRIAL CO., LTD.

	Size			Quantity			Heat	Chemical Composition in %									Hydrostatic Test	Surface & Dimension
	Outside Dia mm	Wall Thickness mm	Unit Length m	Number of Pieces	~~Total Length m~~ C/No.	Total Weight kg	No.	C ×100	Si ×100	Mn ×100	P ×1000	S ×1000	Cu ×100	Ni ×100	Cr ×100	Mo ×100	~~kgf/cm²~~ PSI	
								MAX 8	MAX 75	MAX 200	max 40	max 30	max	800 1100	1800 2000		1500	
1	1"	BWG 14	20'-01"	540	120 ~121	4,018	E62200	4	46	104	29	13		878	1821		GOOD	GOOD
2	1"	BWG 14	16'-01"	732	122 ~123	4,355	E62200	4	46	104	29	13		878	1821		GOOD	GOOD
4	1"	BWG 14	8'-01"	256	125	763	E62200	4	46	104	29	13		878	1821		GOOD	GOOD
							PRODUCT	5	44	100	32	12		853	1816			

	Test No.	Tensile Test: Test Specimen	Yield Strength ~~kgf/mm²~~ KSI	Tensile Strength ~~kgf/mm²~~ KSI	Gauge Length	Elongation %	Bending Test	Flattening Test	Flaring Test	Hardness Test	SOLUTION HEAT TREATMENT	Eddy Current Test	Remarks
		*	min 30	min 75	50mm	min 35				MAX. HRB 90	1100℃ 3MIN. W.Q. (2012°F)		
1	1	F.S	41.6	90.0		60		GOOD	GOOD	81	04b-01-1		
	2		42.6	91.3		64				81			
	3		42.6	91.3		64				82			
	4		41.8	90.4		65				81			
2	1	F.S	43.0	91.1		64		GOOD	GOOD	81	04b-01-2		
	2		42.1	91.1		66				81			
	3		41.5	90.4		66				81			
	4		41.3	90.1		65				81			
4	1	F.S	42.8	90.8		64		GOOD	GOOD	81	04b-01-3		
	2		41.5	91.3		66				81			

CONFORMED WITH ORIGINAL 2/21/87

ne hereby certify that material described herein has been made, tested and examined in accordance with the Rules of the contract including ASEM Sec. II, Part A and Sec. VIII, Div.1, 1983 Edition, 1985 Winter Addenda Specified by the Customer.

* F.S: Full Section S: Strip

ereby certify that the material described herein has been made in accordance with the Rules of the contract.

~~Witnessed~~

Reviewed by: H. Yamamoto
11-03-87 MES Inspector Chief of Inspection Section.

ryor to

BACLAD	INSPECTION CERTIFICATE	DOCUMENT No.	K024869
		DATE	Dec.25.1986.

BA №	55881~6.
CUSTOMER	Doosan Manufacturing Co.,Ltd.
ORDER №	—
P. O. №	—
PROJECT NAME	—
USER NAME	—
COMMODITY	TUBE SHEET
MATERIALS	ASTM A240 TP304 ASTM A516—70

DOCUMENT NAME	DOCUMENT №	QUANTITY
REPORT OF MECHANICAL TEST	55881~6—T180	2
REPORT OF ULTRASONIC EXAMINATION	55881~6—T130	11
REPORT OF CLADDING METAL	86-MABS-1768 A~E	5
REPORT OF BASE METAL	A5—0230—001 A5—0187—001	4
MATERIAL CONTROL SHEET	—	—
RUBBING SHEET	—	—
HEAT TREATMENT CHART	—	—

COMPARED WITH ORIGINAL

REVIEWED BY

CHIKUSHINO PLANT
ASAHI CHEMICAL INDUSTRY CO.,LTD.

PLANT QS MANAGER

BACLAD

材料検査証明書
CERTIFIED MATERIAL TEST REPORT

発行番号 No of issue	55881～6-T180
発行月日 Date of issue	Dec.25.1986.

顧客 CUSTOMER	Doosan Manufacturing Co.,Ltd.	注文者 SHIPPER	Sumitomo Corporation.	契約番号 CONTRACT No.	-
品名 COMMODITY	TUBE SHEET	規格 SPECIFICATION	ASTM A264	材質 MATERIALS	合せ材 Cladding Metal: ASTM A240 TP304 母材 Base Metal: ASTM A516-70

爆着番号 BA No.	製造番号 CHARGE No. 合せ材 Cladding Metal	母材 Base Metal	寸法 SIZE (mm) ~~(inch)~~	員数 Q'ty	引張試験 TENSILE TEST 標点距離 Gauge Length ~~inch~~ mm	降伏点 Y.S ~~Yielding Point~~ kgf/mm² ~~ksi MPa~~	引張り強さ Tensile Strength kgf/mm² ~~ksi MPa~~	伸び Elongation %	曲げ試験 BEND TEST 表曲げ Face Bend ×180°	裏曲げ Reverse Bend ×180°	せん断試験 SHEAR TEST せん断強さ Shear Strength kgf/mm² ~~ksi MPa~~	検査結果 RESULTS
						min. 26.7	min. 49.2 max 63.3	min. 21	R= 2T	R= 2T	min. 14	
E-219 55881	65772	8231 BC114-1	74.5(9.5+65) 471.5 ø	1	50	36.2 (51.9KSI)	56.9 (80.9KSI)	32.0	Good	Good	42.3 (60.1KSI)	Pass
E-201 55882	65886	0735 BC113-1	105.2(9.5+95.7) 992.2 ø	2	50	34.6 (49.2KSI)	55.3 (78.6KSI)	34.0	Good	Good	48.0 (68.3KSI)	Pass
E-204 55883	65772	"	98.8(9.5+89.3) 884.2 ø	2	50	33.5 (47.6KSI)	53.9 (76.6KSI)	38.0	Good	Good	43.4 (61.7PSI)	Pass
E-203 55884	"	8231 BC114-1	66.5(9.5+57) 770 ø	2	50	36.2 (51.9KSI)	56.9 (80.9KSI)	32.0	Good	Good	42.3 (60.1KSI)	Pass
E-202 55885	65942	0735 BC117-1	95.0(9.5+85.5) 1213 ø	2	50	33.8 (48.1KSI)	54.5 (77.5KSI)	32.0	Good	Good	47.3 (67.3KSI)	Pass

備考 REMARKS
1. Tension Test
Base metal only

COMPARED WITH ORIGINAL 2/21/87

~~Reviewed~~ Reviewed by: H. Natsuki 11-03-87 M.E.S Inspector

上記注文品は、検査の結果、指定の規格に合格したことを証明します。

We hereby certify that the material described herein has been made in accordance with the rules of the contract.

REVIEWED BY

旭化成工業株式会社 筑紫野工場

CHIKUSHINO PLANT
ASAHI CHEMICAL INDUSTRY CO., LTD.

Plant QS Manager

AT-180

0000853

ASAHI CHEMICAL INDUSTRY CO., LTD.
CHIKUSHINO PLANT
YAMAF CHIKUSHINO-SHI FUKUOKA TEL. 092-926-1966

BACLAD 超音波探傷試験、寸法検査証明書
BACLAD INSPECTION CERTIFICATE

発行番号 No. of Issue 55885-T130
発行月日 Date of Issue Dec.24.1986.

顧客 CUSTOMER	Doosan Manufacturing Co.,Ltd.	注文者 SHIPPER	Sumitomo Corporation.	契約番号 CONTRACT No.	-
爆着番号 BA No.	55885-01-1	規格・方案 SPEC. PROCE.	ASTM A578	実施日 Date of test	Dec. 24.1986.

	材質 Materials	製造番号 Charge No.		厚さ Thick.	寸法 SIZE (mm)	
合せ材 Cladding Metal	ASTM A240 TP304	65942		10.5	注文 Required	95.0(9.5+85.5) 1213 ø
母材 Base Metal	ASTM A516-70	0735	BC117-1	87.5	実測 Actual	98.1 1252 ø

探傷条件 UT Test Conditions	探傷方法 Method	垂直法 Straight Beam Method	探触子 rausducer	28 ø(2.25Z28N) 東京計器(Tokyo Keiki)	周波数 Frequency	2.25 MHz
	機器 Equipment	SM90 東京計器 (Tokyo keiki) ~~EG-6105 ~~	接触媒質 Couplant	水 Water	感度 Sensibilty	BI on a sound area / T 75 % ~~BG=80%~~

試験検査結果 INSPECTION RESULTS

Ultrasonic Test

ASTM A 578 S7 : Satisfactory

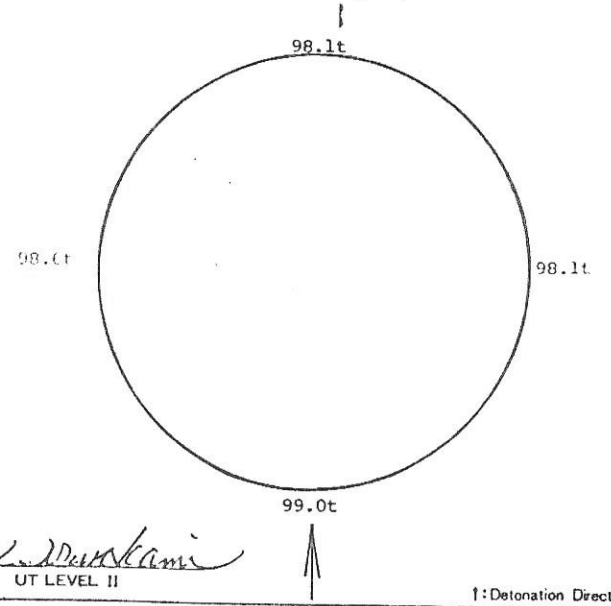

K. Murakami
UT LEVEL II

備考 REMARKS

Scanning Pattern
: Full surface scanning

COMPARED WITH ORIGINAL
2/21/89

REVIEWED BY

~~Witness~~
Reviewed by: H. Katoka
11-03-87 MES Inspector

上記注文品は、検査の結果指定の規格に合格したことを証明します。

We hereby certify that the material described herein has been made in accordance with the rules of the contract.

旭化成工業株式会社 筑紫野工場
品質保証マネージャー

M. K. Murakami
Plant QS Manager

ASAHI CHEMICAL INDUSTRY CO., LTD.
CHIKUSHINO PLANT
YAMAE CHIKUSHINO-SHI FUKUOKA TEL. 092-926-1966

BACLAD 超音波探傷試験、寸法検査証明書
BACLAD INSPECTION CERTIFICATE

発行番号 No. of Issue 55885-T130
発行日付 Date of Issue Dec.24.1986.

顧客 CUSTOMER	Doosan Manufacturing Co.,Ltd.	荷主 SHIPPER	Sumitomo Corporation.	契約番号 CONTRACT No.	-
爆着番号 BA No.	55885-01-2	規格・方案 SPEC. PROCE.	ASTM A578	実施日 Date of test	Dec. 24.1986.

	材質 Materials	製造番号 Charge No.		板厚 Thick.	寸法 SIZE (mm)	
合せ材 Cladding Metal	ASTM A240 TP304	65942		10.5	注文 Required	95.0(9.5+85.5) 1213 ø
母材 Base Metal	ASTM A516-70	0735	BC117-1	87.5	実測 Actual	97.7 1252 ø

探傷条件 UT Test Conditions	探傷方法 Method	垂直法 Straight Beam Method	探触子 rausducer	28 ø(2.25Z28N) 東京計器(Tokyo Keiki)	周波数 Frequency	2.25 ~~6~~ MHz	
	機器 Equipment	SM90 中京計器 (Tokyo keiki) ~~EG-510E~~	接触媒質 Couplant	水 Water	感度 Sensibity	BI on a sound area / T 75 % ~~BG = 0.0%~~	

試験検査結果 INSPECTION RESULTS	備考 REMARKS
Ultrasonic Test ASTM A 578 S7 : Satisfactory	Scanning Pattern : Full surface scanning

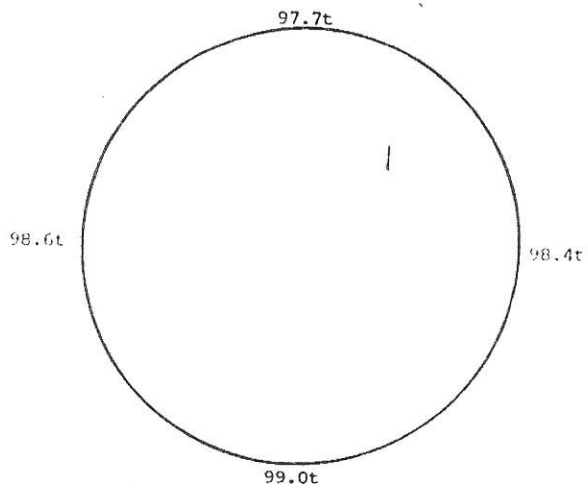

COMPARED WITH ORIGINAL

REVIEWED BY

UT LEVEL II

↑:Detonation Direction

~~Witnessed~~
Reviewed by:
11-03-87 NES Inspector

上記注文品は、検査の結果指定の規格に合格したことを証明します。

We hereby certify that the material described herein has been made in accordance with the rules of the contract.

旭化成工業株式会社 筑紫野工場
品質保証マネージャー

Plant QS Manager

INSPECTION CERTIFICATE
検 査 証 明 書

Certificate No 成績表番号: 86-MAB6-1768 E

Customer 客先: ASAHI CHEMICAL INDUSTRY CO.,LTD.

BA NO 5588

NAR STAINLESS STEEL
ST TITANIUM

NIPPON STAINLESS STEEL CO., LTD.
日本ステンレス株式会社
HEAD OFFICE NO. 6-2, HONSHIO-CHO SHINJUKU-KU, TOKYO JAPAN
本社 東京都新宿区本塩町6番2号
TELEPHONE TOKYO (03) 358 2511
電話 東京

Date 発行日: DEC. 8, 1986.

049

Specification & Type 規格 種類: ASTM A240 TP304

Dimension 寸法 Min Max

Condition & Finish 状態 仕様: NO.4/R.G

No.	Purchase Order No. 客先注文番号	Shape & Size 形状寸法 (Unit: mm, inch, feet, cm, space)	Quantity 納入数量	Weight 重量 kgs	Inspection No. 検査番号	Dimensional & Visual Examination	Notes
1	EANe 55885	B 10.500X 1295. X 2640.	1	285	16280020	088D	HEAT NO. 65942

Notes: #1 Shape 形状 A.Coil コイル B.Sheet Plate 鋼板 F.Circle 円盤 J.Ring リング K.Square Bar 角棒 M.Flat Bar フラットバー H.Foil 箔 R.Round Bar 丸棒 S.Square Billet 角ビレット T.Round Billet 丸ビレット U.Angle アングル V.Unequal Angle 不等辺アングル W.Flange フランジ Y.Cast 鋳造 Z.Centrifugal Cast 遠心鋳造 #2 L.C J.Ladle C.Check #3 Element 成分 CC.Cr+Ta+Ti GG.Other Elements Each HH.Other Elements Total Remain Remainder Bal. Balance #4 Position 位置 T.Top M.Middle B.Bottom S.Soft H.Hard #5 Direction 方向 T.Transverse L.Longitudinal #6 Test Item 試験項目 YY.0.2%Offset Yield Strength 0.2%耐力 ZY.0.2%Offset Yield Strength 0.2%耐力 HY.High Temperature Yield Strength 高温降伏点 HT.High Temperature Tensile Strength 高温引張強さ HE.High Temperature Elongation 高温伸び FR.Ferrite δ フェライト FC.Ferrite Content フェライト量 NH.Nickel Balance ニッケル当量 MP.Magnetic Permeability 透磁率 SM.Non-Metallic Inclusions Test 非金属 GS.Grain Size 結晶粒度 IP.Impact Test 衝撃試験 K.Knife Edge 刃先 #7 Heat Treatment 熱処理 Q.Quenching 焼入 T.Tempering 焼戻 S.Stabilizing Treatment 安定化処理

Chemical Composition in % 化学成分 #3

		C	SI	MN	P	S	CR	NI		N			
	C	X100	X100	X100	X1000	X1000	X100	X100		X100			
Min							1800	800					
Max		8	100	200	45	30	2000	1050		10			
1	L	8	70	144	37	5	1831	850		2			

Tensile Test 引張試験

	Yield Strength 0.2% Offset 耐力	Tensile Strength 引張強さ	Elongation 伸び	Reduction of Area 絞り	Hardness Test 硬さ試験	Bend Test 曲げ試験	#6	#6
	KGF/MM2	KGF/MM2	%	%	HB			
	21 (29.9KSI)	53 (75.4KSI)	40.0		202			
	32 (45.5KSI)	72 (102.4KSI)	57.8		174			

Inspected
Reviewed by: H. Hatoko
11-03-87 NDS Inspector

COMPARED WITH ORIGINAL

REVIEWED BY

Heat Treatment 熱処理 #7: 1080°C WQ (1976°F)

SPEC. NO. 83P-002D REV.1

We hereby certify that the material described herein has been manufactured and tested satisfactorily in accordance with the requirements of the above specification.

NIPPON STAINLESS STEEL CO., LTD.
日本ステンレス株式会社
NAOETSU WORKS.
直江津工場
K. Shimamura
Manager of Quality Assurance Section
品質保証部長

Inspection Agency 検査機関

Witnessed by 立会者

S1

日本鋼管株式會社
NIPPON KOKAN K.K.
検査証明書
INSPECTION CERTIFICATE

本社 東京都千代田区丸の内1丁目2番2号
Head Office 1-2, Marunouchi 1 chome, Tokyo 100 Japan

受注者 Purchaser	ASAHI KASEI KOGYO CO., LTD.
受注者注文番号 Purchaser's Order No.	ACI 9558
商社名 Trading Co.	C. ITOH & CO., LTD.
当社管理番号 Reference No.	0001-2011K026
品名 Commodity & 仕様 Specification	HOT ROLLED STEEL PLATE ASTM A516-70

証明書番号 Certificate No.	[illegible] (2)
日付 Date	1986-12-12
船番 Ship's No.	
工事番号 Construction No.	
契約番号 Contract No.	A2YL777

00 (03

1 (867297)

製品番号 Roll No. / 鋼番 Heat No.	行番 Item No.	寸法 Size (MM) T X W X L	員数 Quantity	質量 Mass CAL	C	Si	Mn	P	S	Cu	Ni	Cr	Mo	V	Nb	Sol.Al	Ceq	引張試験 Tensile Test Y.S KSI kgf/mm²	T.S KSI kgf/mm²	El %	U.S.	S.P.	HT TEST No.
					×100			×1000				×100				×1000							
AU611-1		BAND 55886																					
7696	004	40.50 X 1085 X 3000	1	103525	20	117	24	4								29		56.8 / 39.9	80.5 / 56.636	E	G	G	N 67280A
		Y.S:0.5% UNDER LOAD																					
		AUSTENITE GRAIN SIZE		: 6.5																			
BC114-1		BAND 55881																					
6231	001	67.00 X 1600 X 3000	1	157825	20	118	19	2								24		49.8 / 35.0	79.2 / 55.735	E	G	G	N 67283A
		Y.S:0.5% UNDER LOAD																					
		AUSTENITE GRAIN SIZE		: 7.5																			
BC117-1		BAND 55885																					
6735	003	87.50 X 1270 X 3000	1	261724	19	114	15	2								26		47.4 / 33.3	76.5 / 53.835	E	G	G	N 66586A
		Y.S:0.5% UNDER LOAD																					
		AUSTENITE GRAIN SIZE		: 7.0																			
		TOTAL	3	5230KGS																			
		PLATE NORMALIZING		: 910°C X 12MIN.														(AU611)					
				910°C X 17MIN.														(BC114)					
				910°C X 20MIN.														(BC117)					
				(1600°F)																			

~~H. Takeuchi~~

Reviewed by: H. Takeuchi

11-03-87 NES Inspector

COMPARED WITH ORIGINAL

REVIEWED BY

Note 1) Ceq21C = Mn/6 + Si/24. Ceq22C = Mn/6 + Si/24 + Ni/40 + Cr/5 + Mo/4 + V/14. Ceq23C = Mn/6 + Si/24 + (Cu + Ni)/15 + (Cr + Mo + V)/5. Ceq42C = Mn/6 + Si/24 + (Cu + Ni)/15 + (Cr + Mo + V)/5. Ceq53C = Mn/6. Ceq6 C = Mn/6 + (Mo + V)/3. Ceq72C = Mn/3 [illegible] Mn/6 + Si/24 + Mo/4 + V/14. Ceq9C = Mn/6 + Si/24 + Ni/40 + Cr/5 + Mo/4 + Cu/13. Ceq30C = Mn/6 + Si/24 + Ni/60 + Cr/5 + Mo/4 + V/14. Ceq23C = Mn/6 + Si/24 + Ni/40 + Cr/5 + Mo/4. Ceq24C = Mn + Si + Cr + Mo/4 + Ni + Cu/13. [illegible] Mn/6 + Si/24 + Mo/4 + V/14. Ceq3 = Mn/2 + (Cu + Ni)/15 + Cr/5 + Mo/5 + V/20 + Mo/15 + V/10 + NB
El: Elongation Factor. 伸び係数 = X.Z = (10P + 35b + 45n + Aa) × 1/180. J = (Si + Mn) × (P + Su) × 1000/. Position. 位置 T Top. 頂部. B Bottom. 底部. F Flange. フランジ. W Web. ウェブ. Direction. 方向 L Longi. 縦. C Trans. 横. Z Through the [illegible] Area. 板厚
Size of Impact Test Piece 衝撃試験片寸法 1 = 10mm × 10mm. 2 = 7.5mm × 10mm. 3 = 2/3 × 10mm. 4 = 5mm × 10mm. 5 = 1/3 × 10mm. 6 = 2.5mm × 10mm. 7 = T × 10mm. Gauge Length. 標点距離 A.G.L = 200mm. B.G.L = 50mm. E: L = 5mm. H.G.L = [illegible] J.G.L = [illegible] K.G.L = 50 M.G.L = 5.65. [illegible]
H.G.L = 5.65. X.G. R.G.L = 4D. S.G.L = 50mm. U.G.L = 100mm. Y.G. Heat Treatment. 熱処理 N Normalizing. 焼ならし. Q Quenching. 焼入. T Tempering. 焼戻. SR Stress Relieving. 応力除去. CR Controlled Rolling. 低温熱間圧延 U S.T Ultrasonic Test. 超音波探傷 S.P.T Sulphur Print Test. [illegible]
Visual & Dimensional 外観・寸法. G.Good. 良好. d ... Decarburized. 脱炭. a ... Austenite Grain Size. オーステナイト粒度

上記製品は検査の結果指定の規格に合格していることを証明いたします。

WE HEREBY CERTIFY THAT THE MATERIAL DESCRIBED HEREIN HAS BEEN TESTED AND [illegible] SATISFACTORY RESULTS IN ACCORDANCE WITH THE [illegible]

H. Saitoh
Manager of Inspection Sec.
FUKUYAMA WORKS

福山製鉄所検査課長

福山製鉄所：広島県福山市鋼管町1番地 FUKUYAMA WORKS: 1, Kokan-cho, Fukuyama 721 Japan

0000071

超音波探傷試験成績
Ultrasonic Examination

日本鋼管株式會社 福山製鉄所
NIPPON KOKAN K.K. FUKUYAMA WORKS

証明書番号 Certificate No :
日付 Date :

発注者 Purchaser		契約番号 Contract No	
規格 Specification			

試験基準 Examination Standard	☐ JIS G0801 ☐ ASTM A435 ☐ ASME SA435 ☑ ASTM A578 Level I ☐ ASME SA578 Level ☐
装置 Apparatus	☐ USM2M ☑ USL32 ☐ FD410
試験方法 (Examination method) ☑ 垂直 (Straight beam) ☐ 斜角 (Angle beam)	☐ ギャップ法 Gap method ☑ 局部水浸法 Water column coupling method ☐ 直接接触法 Direct contact method
探触子 Probe	☐ 5Z8×20ND(5MHz,4×20mm) ☐ 5B20I(5MHz,20mmφ) ☐ 5Z20I(5MHz,20mmφ) ☐ 2Q30N(2MHz,30mmφ) ☐ 5Z25 4I(5MHz,25.4mmφ) ☑ 2Z25 4I(2.25MHz,25.4mmφ) ☐ 4B20×22A45(4MHz,45°,20×22mm) ☐ 4B20ND(4MHz,20mmφ) ☐
試験片 Test block ☐ 標準試験片 Standard test block ☐ 対比試験片 Reference test block ☑ 被検鋼板 Plate	☐ JIS G0801,RB-D ☐ JIS Z2346,STB-N1 ☐ JIS Z2345,V15-2 0 ☐ JIS Z2345,V15-2 8 ☐ JIS Z2345,V15-4 ☐ JIS Z2347,STB-A1 ☑ 健全部(Sound area) ☐
エコー高さ Calibration echo height	☐ (B1：50%)+10dB ☐ 25% ☐ 30% ☐ 40% ☐ 50% ☐ 60% ☐ 70% ☑ 75% ☐ 80% ☐
探傷面 Surface condition	良 (Good)
接触媒質 Couplant	☑ 水(Water) ☐

探傷位置 (Scanning location)

- ☑ エッジ50mm幅全面探傷 (Edge：scanning with50mm width)
- ☐ エッジ100mm幅全面探傷 (Edge：scanning with100mm width)
- ☐ 内部100mピッチCスキャニング探傷 (Inside：C scanning on100mm centers)
- ☐ 内部200mピッチCスキャニング探傷 (Inside：C scanning on200mm centers)
- ☐ 内部75mピッチLスキャニング探傷 (Inside：L scanning on75mm centers)
- ☐ 内部100mピッチLスキャニング探傷 (Inside：L scanning on100mm centers)
- ☐ 内部200mピッチLスキャニング探傷 (Inside：L scanning on200mm centers)
- ☐ 内部100mピッチ格子目上探傷 (Inside：scanning on100mm grid lines)
- ☐ 内部200mピッチ格子目上探傷 (Inside：scanning on200mm grid lines)
- ☑ 内部9mピッチ格子目上探傷 (Inside：scanning on9m grid lines)
- ☐ 全面探傷(10%オーバーラップ) (Full surface scanning 10% overlap)
- ☐ 顧客指定図面による (According to purchaser's drawing)

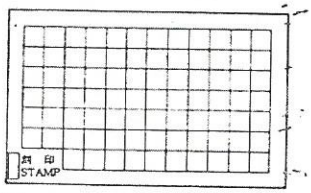

試験者 Examined by	判定者 Judged by

☑ 適用項目 Applicable Item　B1：第1回底面エコー 1st back reflection　C scanning：Cross scanning to the rolling direction　L scanning：Longitudinal Scanning to the rolling direction

製品番号 Roll No	鋼番 Heat No	寸法 Size ( )	結果 Result	
[illegible]	[illegible]	[illegible]	[illegible]	
[illegible]	[illegible]	[illegible]	[illegible]	
[illegible]	[illegible]	[illegible]	[illegible]	

Reviewed by: [illegible] NDT Inspector 11-03-87

REVIEWED BY [illegible]

COMPARED WITH ORIGINAL [illegible] 2/21/87

H Saitoh
[illegible] Manager
NIPPON KOKAN K.K.

INSPECTION CERTIFICATE

REPORT NO. : 8612018
CUSTOMER : 000 SAN MACHINERY
MATERIAL : SA105
P.O NO. : C-43-1206

W/O NO. 641040BP

1987. 2 20

DATE : 87.2.20.

KOREA FLANGE CO., LTD.
194, Dong Bu-Dong, Ulsan,
Kyung Nam, KOREA.

Article	Type of Test / Specification		HEAT NO	Size of Test Piece: Dia (mm-in)	Size of Test Piece: Area (mm²-in²)	Size of Test Piece: Length (mm-in)	Tension Test: Y.P (P.S.I kg/mm²)	Tension Test: T.S (P.S.I kg/mm²)	Tension Test: Elong (%)	Tension Test: R.A (%)	Bend Test: Former / Result	Impact: CHARPY (kg-m)	Hardness: HB HS HR	Remark
	Specification						MIN 36000	MIN 70000	MIN 22.0	MIN 30.0			MAX 187	
S/O	E-202	2	633	0.5	0.196	2.0	42683	74691	32.5	61.8			147	015
S/O	E-219	1	633	0.5	0.196	2.0	42683	74691	32.5	61.8			147	019
							BLANK							

Chemical Composition

Specification	C × 1/100	Si × 1/100	Mn × 1/100	P × 1/1000	S × 1/1000	Ni × 1/100	Cr × 1/100
	MAX 0.28	MAX 0.35	0.60 1.05	MAX 0.040	MAX 0.050		
Heat No. (Charge No.)							
633	24	21	86	14	14		
			BLANK				

OTHERS

Reviewed by: H. Nelson
28-03-87 MES Inspector
Reviewed by DSM QC

Heat Treatment
Quenching ℃ h
Tempering ℃ h
Normalizing 1670 °F ± 2 hA.C
Annealing ℃ h

Engineer in charge

We hereby certify that the material described herein has been satisfactorily tested as above in accordance with the specification

Witnessed By

SEC. CHIEF of QA Dep't

000083

INSPECTION CERTIFICATE

REPORT NO. : 861225001
CUSTOMER : DOO SAN MACHINERY
MATERIAL : SA105
P/O NO. : C-43-1322

W/O NO. 641215AP

DATE : 87.2.20.

1987. 2. 20

KOREA FLANGE CO., LTD.
194, Dong Bu-Dong, Ulsan,
Kyung Nam, KOREA.

Article	Type of Test		HEAT NO	Size of Test Piece			Tension Test				Bend Test	Impact	Hardness	Remark
				Dia	Area	Length	Y.P. P.S.I	T.S P.S.I	Elong	R.A	Former / Result	CHARPY	HB HS HR	
	Specification			mm in	mm² in²	mm in	kg/mm²	kg/mm²	%	%		kg·m		
							MIN 36000	MIN 70000	MIN 22.0	MIN 30.0			MAX 187	
AN 300WNRF S80	6	5	607	0.5	0.196	2.0	38984	71849	32.6	62.9			143	001
AN 150WNRF S80	6	8	682	0.5	0.196	2.0	39837	73841	33.4	61.1			140	002
AN 600WNRF S80	4	1	668	0.5	0.196	2.0	39553	71707	30.6	58.8			143	003
AN 300WNRF S80	4	4	607	0.5	0.196	2.0	38984	71849	32.6	62.9			143	004
AN 300WNRF S80	4	3	668	0.5	0.196	2.0	39534	71707	30.6	58.8			143	004

Chemical Composition

Specification	C	Si	Mn	P	S	Ni	Cr
	MAX 0.28	MAX 0.35	0.60 1.05	MAX 0.040	MAX 0.050		
Heat No. (Charge No.)	C ×1/100	Si ×1/100	Mn ×1/100	P ×1/1000	S ×1/1000	Ni ×1/100	Cr ×1/100
607	22	20	76	15	9		
682	23	27	82	18	14		
668	23	20	77	11	7		
607	22	20	76	15	9		
668	23	20	77	11	7		

OTHERS.

~~Witnessed~~
Reviewed by: H. Kato
28-03-87 MES Inspector
Reviewed by DSM

Heat Treatment
Quenching ℃ h
Tempering ℃ h
Normalizing 1670 °F 3 h A.C
Annealing ℃ h

Engineer in charge

Witnessed By

We hereby certify that the material described herein has been satisfactorily tested as above in accordance with the specification

SEC. CHIEF of QA Dep't

000103

INSPECTION CERTIFICATE

REPORT NO. : 8702668-1
CUSTOMER : DOO SAN MACHINERY
MATERIAL : SA105
P/O NO. : C-43-1352

W/O NO. 641216BP

DATE : 87.2.20.

KOREA FLANGE CO., LTD.
194, Dong Bu-Dong, Ulsan,
Kyung Nam, KOREA.

Article	Type of Test		HEAT NO	Size of Test Piece			Tension Test				Bend Test	Impact	Hardness	Remark
				Dia	Area	Length	Y.P	T.S	Elong	R.A	Former ( )	CHARPY	HB	
				~~mm~~ in	~~mm²~~ in²	~~mm~~ in	~~kg/mm²~~ P.S.I	~~kg/mm²~~ P.S.I	%	%	Result	kg·m	~~HRS~~ ~~HRB~~	
	Specification						MIN 36000	MIN 70000	MIN 22.0	MIN 30.0			MAX 197	
AN 300L/JFF	5	4	646	0.5	0.196	2.0	39553	74126	30.2	60.0			147	013
AN 150L/JFF	6	2	663	0.5	0.196	2.0	41402	73841	33.2	60.8			147	014
AN 300L/JFF	4	2	669	0.5	0.196	2.0	40549	72276	33.4	62.1			140	015
AN 300L/JFF	11/2	56	606	0.5	0.196	2.0	37275	75122	30.2	64.0			149	016
							BLANK							

Chemical Composition

Specification	MAX 0.28	MAX 0.35	0.60 1.05	MAX 0.040	MAX 0.050			
Heat No. (Charge No.)	C ×1/100	Si ×1/100	Mn ×1/100	P ×1/1000	S ×1/1000	Ni ×1/100	Cr ×1/100	
646	22	20	81	17	10			
663	21	20	82	17	20			
669	22	22	83	20	23			
606	20	22	80	12	15			
			BLANK					

OTHERS.

~~Witnessed~~
Reviewed by: H. Hatch
28-03-87 MES Inspector

Reviewed by DSM QC
YBK

Heat Treatment
Quenching ℃ h
Tempering ℃ h
Normalizing 1670 °F ~ 3 h A.C
Annealing ℃ h

Engineer in charge

We hereby certify that the material described herein has been satisfactorily tested as above in accordance with the specification

Witnessed By

SEC. CHIEF of QA Dep't

000109

ner 두 산 기 계

CERTIFIED MATERIAL TEST REPORT

SUNG KWANG BEND CO., LTD.

520, SinPyung-Dong, Saha-Ku Pusan, Korea.
TEL : 204-8501~5
TLX : SKBEND K 52352
FAX : 204-8149

Date of issue FEB. 11, 1987

Job No.	Spec. for Material	Spec. for Inspection	Surface & Dimension	P. O. No.	Certificate No.
	ASTM A403 WP304	ANSI B16.9	GOOD		SCL - 0854
ifacture No.	Nomenclature		Size	Quantity	Heat Treatment
	Con-Reducer S/40 B.W		12x6"		SOLUTION TREATED. 1100 C Hol.(40Min.) (2012°F) Heat. "Water"
Material Maker	Heat No.	Stamp No.	Test Piece Size(inch)		
SRN CROSS STEEL	765054		Dia. M. / G. L / WIDTH		

CHEMICAL COMPOSITION(%)

	C	Si	Mn	P	S	Ni	Cr
Min						8.00	18.00
Max	0.08	1.00	2.00	0.045	0.030	11.00	20.00
	0.04	0.38	1.46	0.021	0.015	8.20	18.19

ASTM A370 TEST PIECE

Tension Test Y.S Psi	T.S Psi	E. %	R. %	Bending Test	Flattening Test	Hardness HB HS HRC ( )	Impact Test	Hydrostatic Test
30,000	75,000	35						
43,210	82,160	45.6	-	-	-	-	-	-

COMPARED WITH ORIGINAL

ERTIFY THIS MATERIAL HAS BEEN MANUFACTURED EXAMINED IN ACCORDANCE WITH ALL REQUIREMENTS OF SPECIFICATION AND THE RESULTS OF ALL EXAMINATION ACCEPTABLE.

Witnessed

Reviewed by: AIS Inspector

Reviewed by A.I. 3/17/87

L-43-0008-87

Reviewed by DSM QC

QUALITY ASSURANCE DEP'T

Chief Engineer

essed By

SK-IC-002

INSPECTION CERTIFICATE

): 두산기계 (D-43-3195)

eet No. : KBQC-MT- 471

te of Test : FEB. 18, 1987.

KOREA BOLT IND. CO., LTD.
SALES OFFICE: 620-34, GOORO-DONG, GOORO-KU, SEOUL, KOREA
TEL. : 635-1311/5
TELEX. K25917 KOBOLT
FAX. : 675-3709
FACTORY : 84-11, BANWEOL INDUSTRIAL ESTATE, ANSAN CITY, KYUNGGI-DO, KOREA
TEL. : (0345) 6-3091/4, 83-2639
FAX. : (0345) 83-3768

Description	Size	Specification / Test Piece No	~~Tension Test~~ ~~Yield Strength kg/mm² PSI~~	Tensile Strength kg/mm² PSI	Elongation %	~~Reduction of Area %~~	Hardness Test ~~HB~~ HRC	Heat No.	Chemical Composition (%) C	Si	Mn	P	S	Tempering Temperature 455°C min. (850°F)	~~Bend Test~~ Quantity Pcs	Remarks Sample Nut after heat treatment 540°C/24h HB179min. (1000°F)
			Proof Load lbf				24 - 38 min.max.		0.40 min.			0.040 max.	0.050 max.			
GRADE 2H - AVY HEX NUT	1-5/8-8UN			-			27.0	694135	0.44	0.19	0.64	0.015	0.005	480-510 (890°F - 950°F)	62	207
"	1½ - 8UN			175,000 Good			28.5	692326	0.44	0.20	0.71	0.021	0.006	"	348	217
"	1-1/8-8UN			138,200 Good			30.0	692341	0.46	0.18	0.75	0.024	0.013		372	212
"	1 - 8UNC			106,00 Good			29.5	"	"	"	"	"	"	"	64	223
"	7/8-9UNC			80,850 Good			28.0	CK434	0.45	0.24	0.73	0.014	0.018	"	64	229
"	3/4-10UNC			58,450 Good			31.0	693174	0.43	0.18	0.63	0.021	0.006	"	412	223

Reference: ASTM A194 Grade 2H.

This is to certify that the above results are true and correct in every details.

Reviewed by

COMPARED WITH ORIGINAL

Witnessed by :

~~Witnessed~~

Reviewed by:

MRS. Inspector

I. S. CHOE
Chief of Quality Control Dept.

KOREA BOLT INDUSTRIAL CO., LTD.

m D101-5

A4 (210 X 297)

INSPECTION CERTIFICATE

To: 두산기계 (D-43-3196)

Sheet No. : KBQC-MT- 473

Date of Test : FEB. 18, 1987.

KOREA BOLT IND. CO.
SALES OFFICE. 620-34, GOORO-DONG, GOORO-KU
SEOUL, KOREA
TEL. : 635-1311/5
TELEX: K25917 KOBOLT
FAX : 675-3709
FACTORY : 84-11, BANWEOL INDUSTRIAL ESTATE
ANSAN CITY, KYUNGGI-DO, KOREA
TEL. : (0345) 6-3081/4, 83-2639
FAX. : (0345) 83-3768

Description	Size	Specification / Test Piece No.	Tension Test: Yield Strength ~~kg/mm²~~ PSI	Tensile Strength ~~kg/mm²~~ PSI	Elongation %	Reduction of Area %	Hardness Test HB HRC	Heat No.	Chemical Composition (%): C	Si	Mn	P	S	Cr	Mo	B	~~Bend Test~~ Quantity	Remarks: Tempering Temperature 595°C min. (1100°F)
			105,000 min.	125,000 min.	16 min.	50 min.			0.49 / 0.37	0.35 / 0.15	1.10 / 0.65	0.035 max.	0.040 max.	1.20 / 0.75	0.25 / 0.15		Pcs.	
STUD BOLT	1½ x 345		125,012	136,741	20.7	61.0		A7041	0.41	0.28	0.85	0.017	0.007	0.98	0.21		78	610-630 (1130~1166°F)
"	" x 320		129,479	141,593	19.6	59.2		"	"	"	"	"	"	"	"		56	"
"	1-1/8x305		131,348	143,064	18.5	57.7		A6320	0.40	0.22	0.73	0.015	0.005	1.00	0.16		22	"
"	1 x 290		127,740	139,778	20.2	59.9		A7175	0.40	0.29	0.86	0.018	0.016	0.98	0.21		21	"
"	" x 230		123,691	135,290	21.0	61.4		"	"	"	"	"	"	"	"		22	"
"	" x 130		129,974	142,650	19.1	58.7		"	"	"	"	"	"	"	"		17	"

Reference: ASTM A193 Grade B7.

This is to certify that the above results are true and correct in every details.

Reviewed by

Witnessed by :

Reviewed by:

COMPARED WITH ORIGINAL

I. S. CHOE
Chief of Quality Control Dept.

KOREA BOLT INDUSTRIAL CO., LTD.

Form D101-5

A4 (210 X 297)

REPORT OF LIQUID PENETRANT TESTING

		JOB NO.	N/A
		REPORT NO.	NPR-046-E202 01
		DATE	FEB. 2. 1987
CUSTOMER	MES	LOCATION	SHOP
PROJECT	APPF PROJECT	~~PROJECT NO ORDER NO.~~	86C-MESC-046
DESCRIPTION	2nd REACTOR OVHD CONDENSER (E-202)	DWG. NO.	GC-HE1-05389

MT'L SA213 SURFACE TEMP. 16°C SURFACE PREPARATION AS MACHINED

TECHNIQUE : ☑ Solvent removable ☐ Waterwashable

APPLICATION : ☑ Spraying ☐ Dipping ☐ Brushing

ITEM / METHOD	PENETRANT	REMOVER	DEVELOPER
MANUFACTURER	MAGNA FLUX	MAGNAFLUX	MAGNA FLUX
BRAND NAME	SPOT CHECK	SPOT CHECK	SPOT CHECK
BATCH NO	82G100	82H018	82F056
TIME	20 Min	5 Min	10 Min

REF. CODE ASME Sec. V, VIII DIV. 1 APP. PROCEDURE NO. QCP-11-04 △1

LOCATION and SKETCH

SEE ATTACHED SKETCH SHEET

INDENTIFICATION NO.	GRADE	ACCEPT	REJECT	INTERPRETATION	REMARK
E-202 TT-01	N/A	✓			TUBE TO TUBESHEET
TT-02	N/A	✓			DITTO

Witnessed ~~Obtained~~ by: H. Nathan 02-02-87

EXAMINED BY	DATE	APPROVED BY Level II	DATE	AUTHORIZED BY	DATE
D. H. Wagner Level I	2/2/87	B. W. Rand	2/2/87		

REPORT OF RADIOGRAPHIC TESTING

		JOB NO.	N/A
		REPORT NO.	NRR-046-E202-01
		DATE	FEB. 12, 1987
CUSTOMER	MES	LOCATION	SHOP
PROJECT	APPFI - PROJECT	ORDER NO.	B&C - MESC-046
DESCRIPTION	2nd REACTOR OVHE CONDENSER	DWG. NO.	GC-HZI-B5789

MATERIAL SA-240, 516, 105 Thickness 3.13 m/m

X-RAY: Brand TOSHIBA KV 260 mA 5 Focal spot 2.0 X 2.0 m/m FILM TYPE /SIZE KODAK-AA-T 3 1/2" X 10"

GAMMA RAY: Brand GAMMA N/A Ci N/A Source size N/A S.F.D. 24"

TECHNIQUE: ☑ Single wall ☐ Double wall SCREEN: Lead Fluorescent Front 0.005" Back 0.010"

PENETRAMETER: ASME (STD) IDENTIFICATION NO. #12, 15/47 Source side ☑ Film side ☐

EXPOSURE TIME: 2 Min. 10 Sec. DEVELOPMENT: 20 °C 5 Min. Sec.

CODE & STANDARD ASME SEC V, VIII, DIV. 1 PROCEDURE NO. QCP-11-01A

LOCATION AND SKETCH

SEE ATTACHED SKETCH SHEET.

FILM I.D NO.	WELDER I.D NO.	DEFECT	GRADE	ACCEPT	REJECT	REMARK
E202-BL01	N/A	G	N/A		✓	
BL01 R1		B		✓		
AD1		B		✓		
AD2		B, C		✓		
BL02		A		✓		
BL03		A		✓		
BL04		H			✓	
BL04 R1		A		✓		
AD1		A		✓		
AD2		A		✓		

Reviewed by: [signature] 2-12-87 MES Inspector

A: No defect
B: Porosity
C: Slag inclusion
D: Undercut
E: Overlap
F: Burn through
G: Incomplete penetration
H: Lack of fusion
I: Crack
J: Gas and blowholes
K: Tungsten
L: Sand inclusion
M: Shrinkage
N: Hot tears
O: Unfused chaplets

EXAMINED BY	DATE	APPROVED BY	DATE	AUTHORIZED INSPECTOR	DATE
LEVEL II D. H. WON	2/12/87	LEVEL III B. W. Kaul	2/14/87	N. J. [illegible]	2/14/87

REPORT OF RADIOGRAPHIC TESTING

		JOB NO.	N/A
		REPORT NO.	NRR-046-E202-01
		DATE	FEB. 10. 1987
CUSTOMER	MES	LOCATION	SHOP
PROJECT NAME	APPEI - PROJECT	ORDER NO.	86C-MESC-046
DESCRIPTION	2nd REACTOR OVHD CONDENSER	DWG. NO.	GC-HEI-05389

FILM I.D. NO.	WELDER I.D. NO.	DEFECT	GRADE	ACCEPT	REJECT	REMARK
E 202-BC01	N/A	B. C	N/A		✓	
BC01 R1		A		✓		
AD1		A		✓		
AD2		B		✓		
BC02		A		✓		
BC03		B		✓		
N4-NE02		A		✓		

REMARK

A: No defect
B: Porosity
C: Slag inclusion
D: Undercut
E: Overlap
F: Burn through
G: Incomplete penetration
H: Lack of fusion
I: Crack
J: Gas and blowholes
K: Tungsten
L: Sand inclusion
M: Shrinkage
N: Hot tears
O: Unfused chaplets

Reviewed by: [signature] 14-02-87 MBS Inspector

EXAMINED BY	DATE	APPROVED BY	DATE	AUTHORIZED INSPECTOR	DATE
LEVEL II D. H. Wong	2/12/87	LEVEL III B. W Kang	2/12/87	[signature]	2/21/87

NDE	SKETCH SHEET	TITLE	2nd REACTOR OVHD CONDENSER		
		DWG. NO.	GC-HE1-05389		
		DOCUMENT NO.	E-202	REV.	A

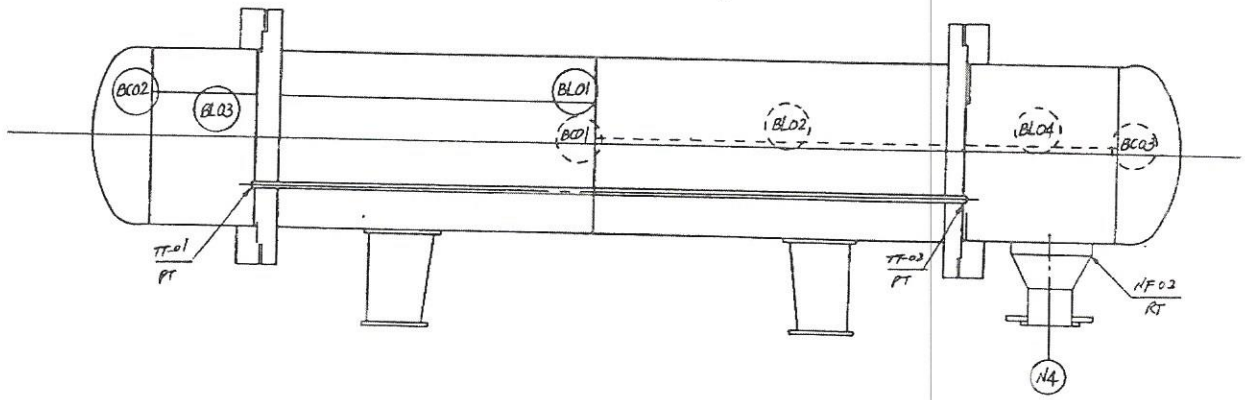

LOCATION	TRAVELLER NO	METHOD	REMARK
BL01 ~ BL04 BC01 ~ BC03 N4 (NF-02)	TRV-E202-4A 2 OF 6 3 OF 6	RT	SPOT
TT-01 -02	TRV-E202-4A 5 OF 6	PT	TUBE TO TUBESHEET

PREPARED BY	REVIEWED BY	Q.C MANAGER
LEVEL II DEC. 1.'86	12-9-86	

11 QH 13

INSPECTION REPORT

DATE: FEB. 14. '87

CUSTOMER	MES	REPORT NO.	DIR-E202-01
PROJECT NAME	APPH PROJECT	PROJECT NO.	86C-MESC-046
ITEM	E-202 2nd. REACTOR OVHD CONDENSER	TRAVELLER NO.	TRV-E202-3A
PART NAME	DIMENSIONAL CHECK	DWG. NO.	GC-HE1-05389

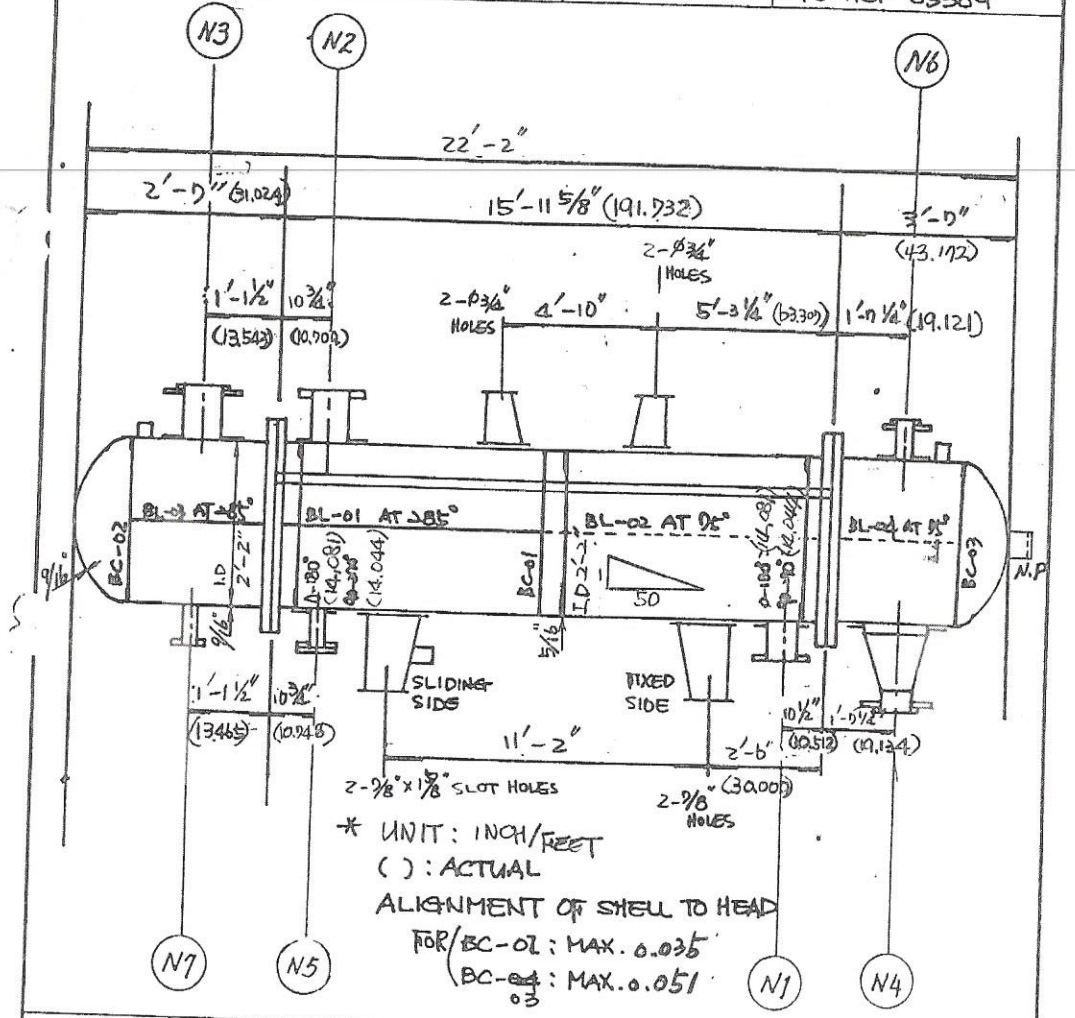

* UNIT : INCH/FEET

( ) : ACTUAL

ALIGNMENT OF SHELL TO HEAD

FOR BC-02 : MAX. 0.035

BC-~~04~~ 03 : MAX. 0.051

RESULT		APPLICABLE SPEC.		EQUIP-MENT	
VIS & DIM.	ACC	ASME SEC VIII DIV.1 TEMA CLASS "C"			CONVEX RULE STEEL RULE

Witnessed	INSPECTED BY	REVIEWED BY	APPROVED BY
Reviewed by: 05-02-87 / 14-02-87 ICT Inspector	2/23/87	2/23	

INSPECTION REPORT

DATE:

CUSTOMER	MES	REPORT NO.	N/A
PROJECT NAME	APPH PROJECT	PROJECT NO.	8bc-MESC-04b
ITEM	N/A	TRAVELLER NO.	N/A
PART NAME	STD. TOL. FOR H/E	DWG. NO.	N/A

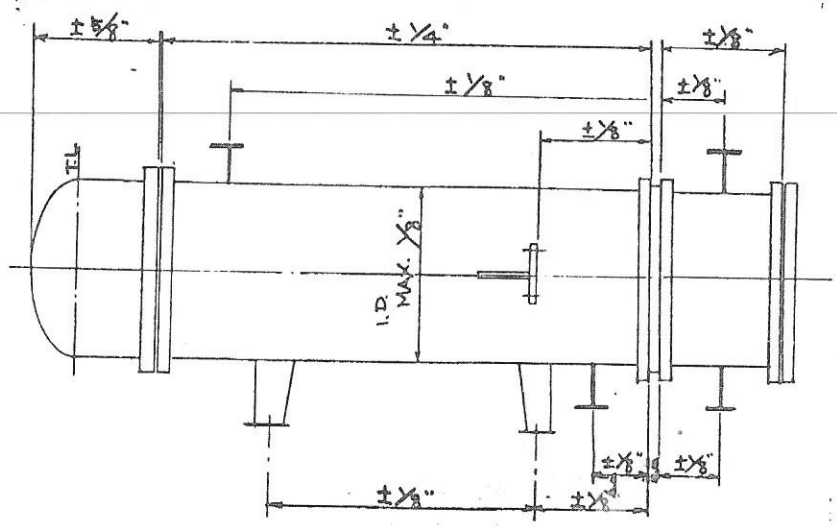

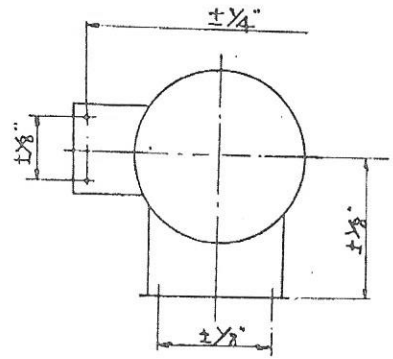

RESULT		APPLICABLE SPEC.	MES SPECIFICATION	EQUIP-MENT	
	INSPECTED BY		REVIEWED BY		APPROVED BY

INSPECTION REPORT

DATE: FEB. 14. '87

CUSTOMER	MES	REPORT NO.	NOD-E202-01
PROJECT NAME	APPR PROJECT	PROJECT NO.	86C-MESC-016
ITEM	E-202	TRAVELLER NO.	TRV-E202-3A
PART NAME	M/HOLE, H/HOLE, NOZZLE	DWG. NO.	GC-HE1-0389

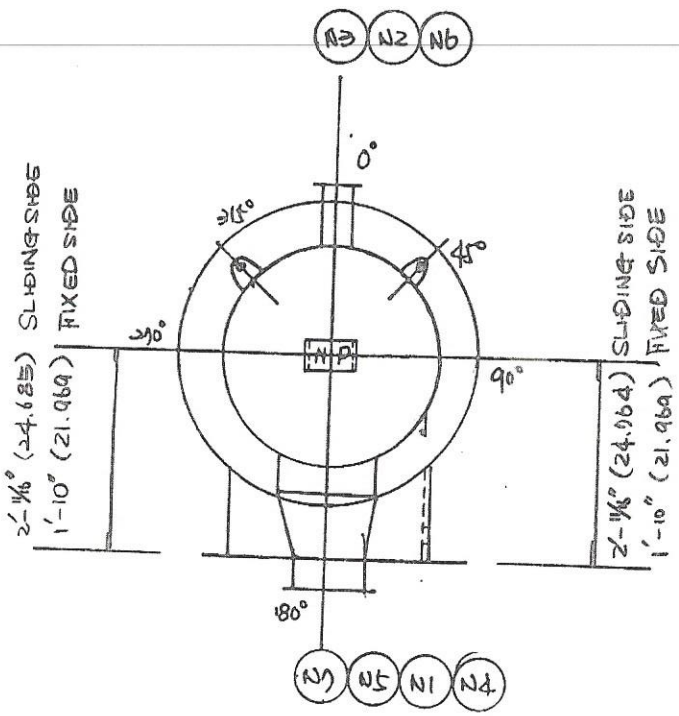

UNIT : FEET/INCH

RESULT	ACC	APPLICABLE SPEC.	ASME SEC.VIII DIV.1	EQUIP-MENT	—

Witnessed by: S.S. 05-02-89 T.S. 18-02-89 TCT Inspector

INSPECTED BY	REVIEWED BY	APPROVED BY
2/13/87	2/23	

INSPECTION REPORT

DATE : 1987 . 2 . 14 .

CUSTOMER	MES	REPORT NO.	NOD-E202-02
PROJECT NAME	APPF PROJECT	PROJECT NO.	86C-MESC-046
ITEM	E-202	TRAVELLER NO.	TRV-E202-3A
PART NAME	NOZZLE ORIENTATION & DIMENSION	DWG. NO.	GC-HE1-03289

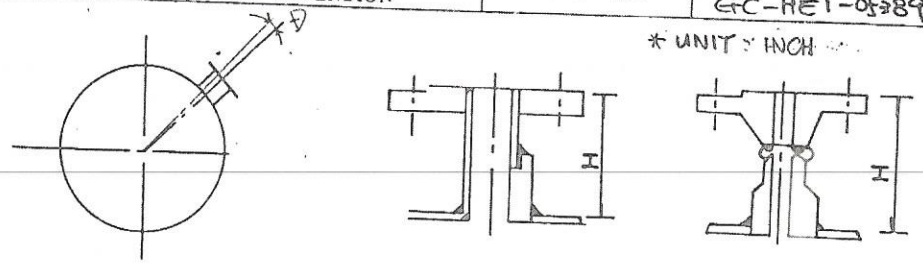

* UNIT : INCH

* SLOPED AS

NOZZLE NO.	SIZE	TYPE	ORIENTATION			HEIGHT			RESULT
			DWG.	TOLER.	ACT(D)	DWG.	TOLER.	ACT(H)	
N-1	6"	WNRF	180°	±1/8"	GOOD	7	±1/8"	6.890 / —	ACC
2	6"	"	0°		GOOD	7		6.890 / —	ACC.
3	6"	L.J	0°		GOOD	7		6.890 / —	ACC.
4	6"/12"	"	180°		GOOD	1'-2"		13.937 / —	ACC.
5	2"	WNRF	180°		GOOD	6"		5.894 / —	ACC
6	4"	L.J	0°		GOOD	7"		6.890 / —	ACC
7	3/4"	LWNRF	180°	±1/8"	GOOD	6"	±1/8"	6.024 / —	ACC.

RESULT	ACC	APPLICABLE SPEC.	ASME SEC. VIII DIV. 1	EQUIPMENT	COMBINATION FINDER STEEL RULE CONVEX RULE

Witnessed	INSPECTED BY	REVIEWED BY	APPROVED BY
~~Reviewed~~ by: SP Park S.S 07-02-87 T.S 14-02-87 ZCT Inspector	2/23	2/23	

DSMF-12-066

DOOSAN MANUFACTURING CO., LTD.

INSPECTION REPORT

DATE: Feb. 14. '87

CUSTOMER	MES	REPORT NO.	SDR-E202-01
PROJECT NAME	APPF PROJECT	PROJECT NO.	86C - MESC - 046
ITEM	E-202	TRAVELLER NO.	TRV- E202 3A
PART NAME	SADDLE DIMENSION	DWG. NO.	GC-HE1-013389

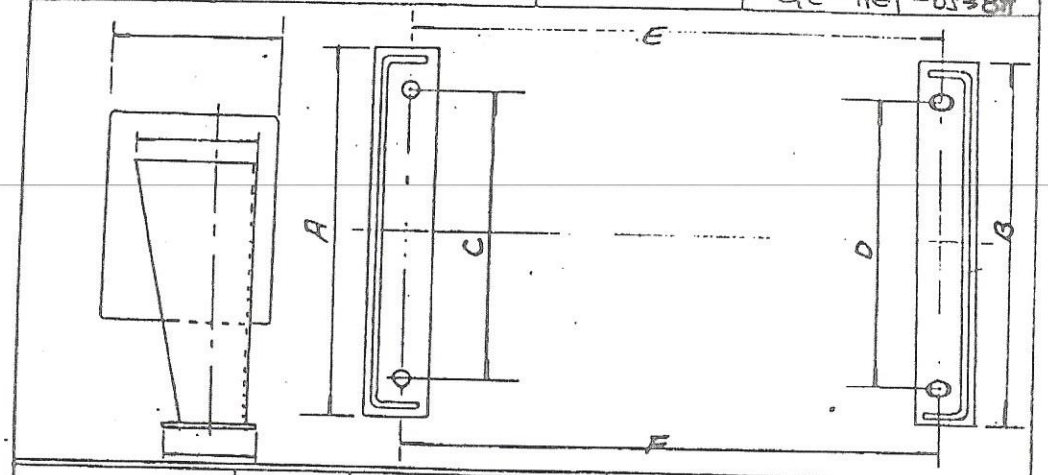

FOR LOWER SIDE	A	B	C	D	E	F
DWG.	2'-0"	2'-0"	1'-6½"	1'-6½"	11'-2"	11'-2"
TOLERANCE	±1/8"					±1/8"
ACTUAL	22.976	23.976	18.386	18.425	134.015	134.015

※ FOR UPPER SIDE SADDLE.

	A	B	C	D	E	F
DWG	1'-0"	1'-0"	7½"	7½"	4'-10"	4'-10"
ACT.	12.014	12.041	7.541	7.482	58.084	58.052

UNIT: FEET/INCH

RESULT	ACC	APPLICABLE SPEC	DSM SPEC.	EQUIP. MENT	CONVEX RULE

Witnessed by: St. Jack
05-02-87 ICT Inspector

INSPECTED BY	REVIEWED BY	APPROVED BY

DOOSAN MANUFACTURING CO., LTD.

HYDROSTATIC/~~PNEUMATIC~~ TEST REPORT

No.: HYT-E202-01

CUSTOMER	MES	EQUIPMENT	E-202
PROJECT NAME	APPF PROJECT	PROJECT No.	86C-MESC-046
DWG. NO.	9C-HE1-03389	JOB No.	N/A
MATERIAL	SA516-60, SA240-304	PROCEDURE No.	QCP-08-11
QUANTITY	1 SET	APPLICABLE CODE	ASME SEC. VIII DIV. 1

	SHELL SIDE	TUBE SIDE
FLUID TYPE	WATER	WATER
DESIGN PRESSURE	85 PSIG	638 PSIG
TEST PRESSURE	128 PSIG	959 PSIG
TEST TEMPERATURE	MIN. 60°F	MIN. 60°F
HOLD TIME(MIN.)	30 MIN.	30 MIN.
PRESSURE GAGE RANGE	0 – 20	0 – 100

ITEM	PRESSURE	TIME	PRESSURE GAGE.	DATE	RESULTS
SHELL SIDE	199 PSIG	40 MIN.	PR.20-21,24	1987.2.5	ACCEPT
TUBE SIDE	996 PSIG	35 MIN.	PR -02,14	FEB.20,'87	ACCEPT

REMARKS

Witnessed ~~Witnessed~~ by: H. Watho
S.S. 05-02-87 MES Inspector
T.S. 20-02-87
N. J. Lee (shell side) 2/5/87
Witnessed by
N. J. Lee (tube side) 2/20/87

PREPARED BY	REVIEWED BY	APPROVED BY	WITNESSED BY
2/21/87			

~~HYDROSTATIC~~/PNEUMATIC TEST REPORT

No: PNT-E202-01

CUSTOMER	MES	EQUIPMENT	E-202
PROJECT NAME	APPF PROJECT	PROJECT No.	86C-MESC-046
DWG. NO.	GC-HE1-05389	JOB No.	N/A
MATERIAL	SA516-60, SA240-304	PROCEDURE No.	ITP-GOHE-01 △
QUANTITY	1 SET.	APPLICABLE CODE	ASME SEC. VIII DIV. 1

	SHELL SIDE	TUBE SIDE
FLUID TYPE	AIR	AIR
DESIGN PRESSURE	85 psig	638 psig
TEST PRESSURE	85 psig	638 psig
TEST TEMPERATURE	N/A	N/A
HOLD TIME(MIN.)	10	10
PRESSURE GAGE RANGE(Kg/cm²G)	0 - 20	0 - 70

ITEM	PRESSURE	TIME	PRESSURE GAGE	DATE	RESULTS
SHELL SIDE	99 psig	20 MIN.	PR20-21,24	1987. 2. 6	ACCEPT
TUBE SIDE	639 psig	30 MIN	PR70-03,04	1987. 2. 21	ACCEPT

REMARKS

* TEST SOLUTION
: SOAPY WATER.

Witnessed ~~Reviewed~~ by: H. J. Choi
S.S. 06-02-87 MES Inspector
T.S. 21-02-87

PREPARED BY	REVIEWED BY	APPROVED BY	WITNESSED BY
	2/23/87		2/23

DSMF-12-047

DOOSAN MANUFACTURING CO., LTD.

INSPECTION REPORT

DATE: FEB. 4 '87

CUSTOMER	MES	REPORT NO.	PLT - E202-01
PROJECT NAME	APPF. PROJECT	PROJECT NO.	86C - MESC - 046
ITEM	E-202	TRAVELLER NO.	TRV-E202-3A
PART NAME	PAD LEAK TEST OF NOZZLE	DRAWING NO.	GC-HE1-05289

NOZZLE NO.	1st TEST	2nd TEST	HOLDING TIME	PRESSURE GAUGE	REMARK
~~N-1~~	~~~~	~~~~	~~~~	~~~~	
~~2~~	~~~~	Delete			
N-3	62 psig	—	10 MIN.	PR 10	
4	68 psig	—	12 MIN.	PR 10	
5	68 psig	—	10 MIN.	PR 10	
6	61 psig	—	10 MIN.	PR 10	

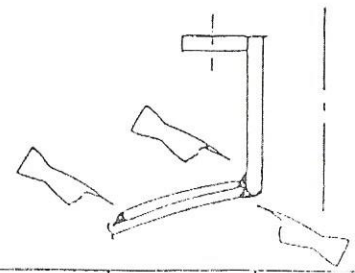

TEST PRESSURE : 50 psig

TEST SOLUTION : Soap Sud

RESULT	ACC	APPLICABLE SPEC.	DSM SPEC.	EQUIPMENT	AIR COMPREESOR PRESSURE GAUGE

	INSPECTED BY	REVIEWED BY	APPROVED BY
~~Approved~~ Reviewed by: H. Natoto			
MES Inspector			