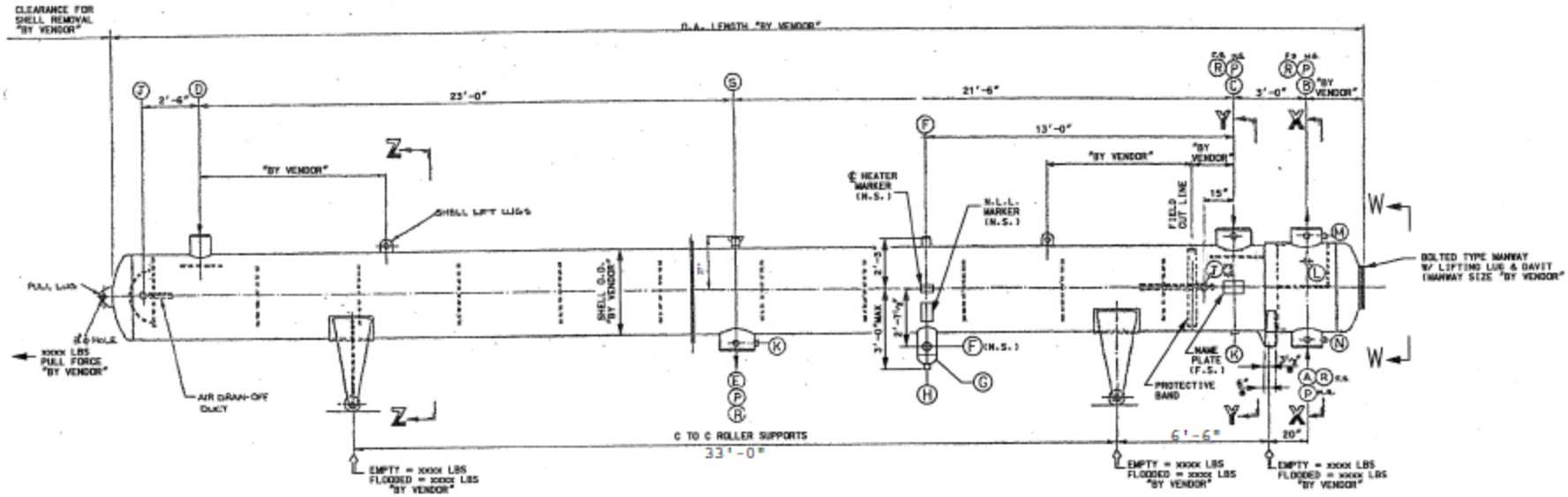

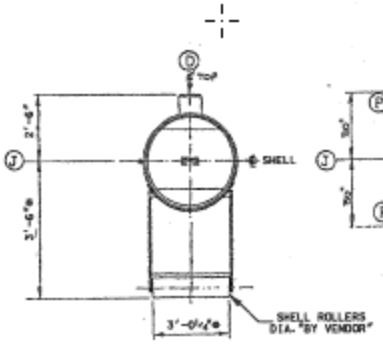

SECTION Z-Z

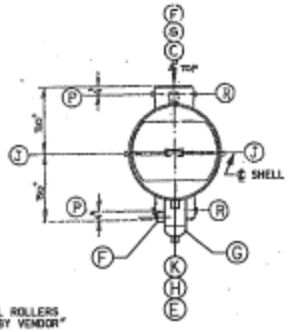

SECTION Y-Y

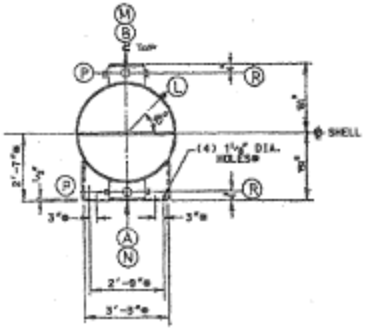

SECTION X-X

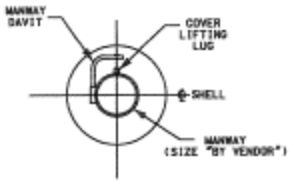

SECTION W-W

Note: A 6" nozzle is to be added on top of the shell approximately 6'-0" from the channel transition

* By Vendor

DB		SPEC F6721			
REV	DATE	DESCRIPTION	DWN	CHK	APPD

OMAHA PUBLIC POWER DISTRICT
FORT CALHOUN STATION UNIT NO. 1

FEEDWATER HEATER

FW14A&14B

SCALE: N.T.S.

DWG NO. SK-07751-650-14A

SHT. 1