Energy Exchanger Company

#105758

HEAT EXCHANGER SPECIFICATION SHEET

P.O. No.: 56603-P-12-04
REV. 0 AS PURCHASED

REV	LN #		
0	1		
0	2		
1	3	Customer	SHAW STONE & WEBSTER (GIANT) — Job No.: X-7265 "AS BUILT"
1	4	Address	HOUSTON, TX — Rev.: 1 — Date: 3/13/07
	5	Plant Location	GRAFTON, VA — File: 06-6102
	6	Service of Unit	DEBUTANIZER FEED/BOTTOMS EXCHANGER — Item: E-645 A/B/C/D/E
	7	Size	34-240 Type AEU Horizontal Connected In 1 Parallel 5 Series
	8	Surf./Unit	[ ] Gross / [✓] Eff 14164.78 ft²; Shells/Unit 5 Surf./Shell [ ] Gross [✓] Eff. 2832.96 ft²
	9		PERFORMANCE OF ONE UNIT

LN #		Shell Side				Tube Side			
10	Fluid Allocation								
11	Fluid Name	DEBUTANIZER FEED				DEBUTANIZER BOTTOMS			
12	Fluid Quantity, Total lb/hr	312999				297443			
13	Vapor (In/Out)			19071					
14	Liquid	312999		293928		297443		297443	
15	Steam								
16	Water								
17	Noncondensable								
18	Temperature (In/Out) °F	121.		349.0		406.		170.	
19	Density (Vapor/Liquid) Lb/Ft³		42.95	2.3600	34.11		31.47		41.97
20	Viscosity cP		0.331	0.0130	0.124		0.10		0.284
21	Molecular Weight								
22	Molecular Weight, Noncondensable								
23	Specific Heat Btu/lb-F		0.5160	0.5930	0.714		0.7960		0.5430
24	Thermal Conductivity Btu/hr-ft-F		0.0660	0.0200	0.047		0.0440		0.0610
25	Latent Heat Btu/lb								
26	Inlet Pressure psia	291.7				269.7			
27	Velocity ft/sec					3.41			
28	Pressure Drop, Allow./Calc. psi	25.00		/	19.00	25.00		/	8.00
29	Fouling Resistance (Min.) Hr-Ft-°F/Btu	0.002				0.002			

LN #			
30	Heat Exchanged	45260000	Btu/hr; M.T.D. (Corrected) 43.25 °F
31	Transfer Rate, Service	73.87	Btu/hr-ft²-F; Clean Btu/hr-ft²-F
32		CONSTRUCTION OF ONE SHELL	Sketch (Bundle/Nozzle Orientation)

LN #		Shell Side	Tube Side
33			
34	Design/Test Pressure psig	310/FV/408	300/FV/391
35	Design Temperature (Max/Min) °F	450/366/0	480/366/0
36	No. Passes Per Shell	1	2
37	Corrosion Allowance inch	0.125	0.125
38	Connections Size & Rating — In	1 - 8" 300RF	1 - 8" 300RF
39	Out	1 - 8" 300RF	1 - 8" 300RF
40	Intermediate	(2) 1 - 10" 300RF	1 - 8" 300RF

LN #		
41	Tube No. 365 U'S OD 0.75 in; Thk. [✓] Min [ ] Avg 0.083 in; Length 20. ft; Pitch 1 in 90°	
42	Tube Type BARE	Material SA-179
43	Shell SA-516-70 [✓] ID [ ] OD 34. in ;Shell Cover SA-516-70	[✓] Integ. [ ] Remov.
44	Channel or Bonnet SA-516-70	Channel Cover SA-516-70 N [ ] Integ. [✓] Remov.
45	Tubesheet-Stationary SA-516-70 N	Tubesheet - Floating
46	Floating Head Cover	Impingement Protection PLATE ON BUNDLE
47	Baffles-Cross 16 - SA-516-70 Type V SEG	% Cut ([✓] Dia. [ ] Area) 20. Spacing c/c 12.94 Inlet in
48	Baffles-Long	Seal Type
49	Supports - Tube SA-516-70 U-Bend YES	Type FULL
50	Bypass Seal Arrangement	Tube-Tubesheet Joint ROLLED
51	Expansion Joint	Type
52	pv² - Inlet Nozzle Bundle Entrance	Bundle Exit
53	Gaskets - Shell Side S.I. D.J.F.G.F	Tube Side S.I. D.J.F.G.F.
54	- Floating Head	
55	Code Requirements ASME SECTION VIII, DIV. 1 CODE STAMP	TEMA Class R
56	Weight/Shell 19,000 lb. EACH Filled With Water 27,550 lb. EACH	Bundle 11,100 lb. EACH
57	REMARKS	
58	(1) DELETED.	
59	(2) 10" OUTLET ON SHELL "D". 10" INLET AND OUTLET ON SHELL "E"	
60	(3) 5 ROW PARTIAL SUPPORT AT SHELL NOZZLE CENTERLINES	
61	(4) PROVIDE (2) 1-1/2" X 300# RFLWN ON EACH OF INLET AND OUTLET (TUBESIDE AND SHELLSIDE) NOZZLES OF EACH INDIVIDUAL	
62	SHELL (EXCHANGER).	
63	(5) TIE ROD SPACER SLEEVES SHALL BE SCH. 40 PIPE THICKNESS.	
64	(6) SHELLSIDE SHALL BE DESIGNED FOR HYDROGEN SERVICE.	
65		

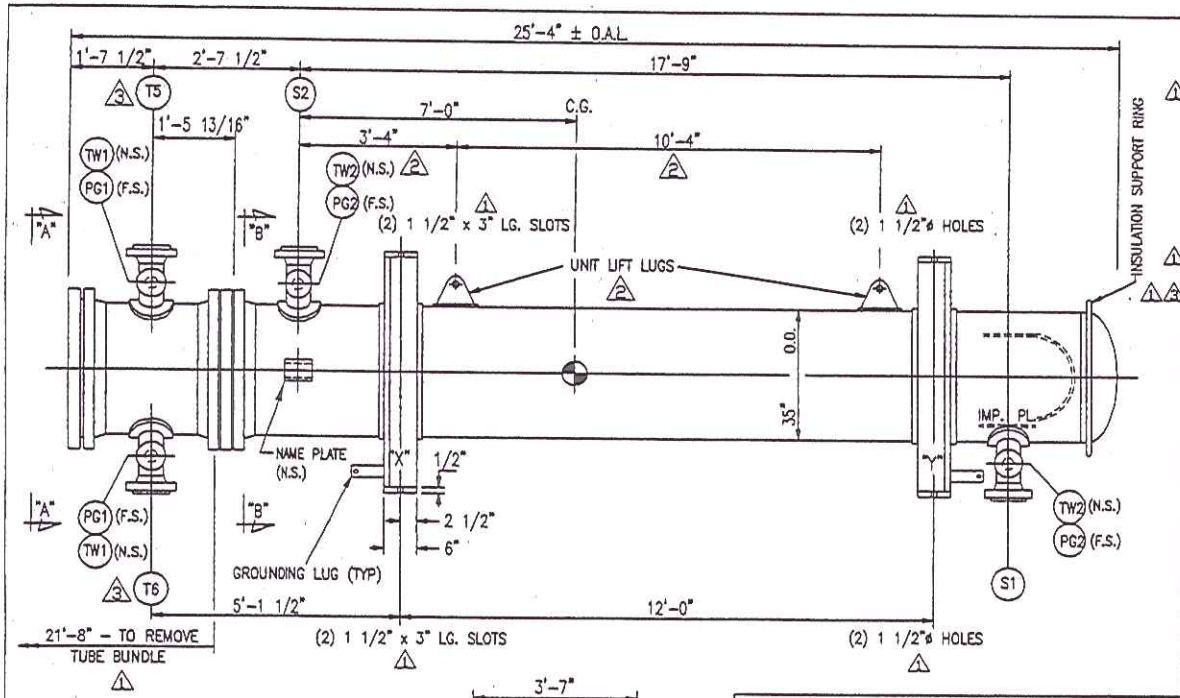

DESIGN DATA	SHELL	TUBE
DESIGN PRESSURE P.S.I.G.	310	300
VACUUM PRESSURE P.S.I.G.	FV @ 366°F	FV @ 366°F
TEST PRESSURE P.S.I.G.	408	391
DESIGN TEMP. Deg.F.	450	480
MDMT Deg. F.	0	0
CORROSION ALLOWANCE	1/8"	1/8"
NUMBER OF PASSES	1	2
RADIOGRAPHY	SPOT	SPOT
HEAT TREAT REQUIRED	NO	U-BENDS ONLY
M.A.W.P. (H&C) P.S.I.G.	314	301
LIMITED BY	FLANGE BOLTING	FLANGE RIGIDITY
M.A.W.P. (N&C) P.S.I.G.	314	301
LIMITED BY	FLANGE BOLTING	FLANGE BOLTING
INSULATION (BY OTHERS)	1 1/2"	2"

ESTIMATED WEIGHTS, LBS.

DRY: 19,000# BUNDLE: 11,100# WET: 27,550#

SPECIFICATIONS

ASME CODE SECTION VIII, DIVISION 1, 2004 ED., 2005 ADD. (STAMP: YES).
TEMA CLASS R, API-660 AND CUSTOMER SPECIFICATIONS APPLY.
NATIONAL BOARD REGISTRATION REQUIRED.

MATERIAL

CHANNEL: SA-516-70
SHELL: SA-516-70
TUBESHEETS: SA-516-70N
BAFFLES: SA-516-70
TUBES: SA-179
(365) 3/4" O.D. X .083" (MIN) X 20'-0" STR. LGTH.
TUBE PITCH: 1" □ SURFACE: 3043 SQ. FT.

CERTIFIED AS-BUILT
D.D. CARLO 4/24/07

GENERAL NOTES

ALL BOLT HOLES TO STRADDLE NATURAL CENTERLINES.
GASKETS: 1/8" THK. SOFT IRON, DBL. JKT., FLEXIBLE GRAPHITE FILLED.
TWO (2) SPARE SETS OF GASKETS REQUIRED.
SHELL SIDE IS IN HYDROGEN SERVICE.
PAINT: SEE PAINT MAP ON DWG. X-7265-AB. 2
THIS UNIT STACKS UNDER ITEM E-645D & E, SERIAL NO. X-7265D & E. 2
SEE DWG. X-7265-A6 FOR STACKING ARRANGEMENT.
TUBE BUNDLES ARE INTERCHANGEABLE.
NITROGEN PURGE IS REQUIRED.

NOZZLE SCHEDULE

MK	QT	DESCRIPTION	PROCESS	AUXILIARIES
S1	1	8" 300# RF WN	INLET	SEE T.W. & P.G.
S2	1	8" 300# RF WN	OUTLET	SEE T.W. & P.G.
T5	1	8" 300# RF WN	INLET	SEE T.W. & P.G.
T6	1	8" 300# RF WN	OUTLET	SEE T.W. & P.G.
TW1	2	1 1/2" 300# RFLWN **	T.W.	
TW2	2	1 1/2" 300# RFLWN **	T.W.	
PG1	2	1 1/2" 300# RFLWN **	P.G.	
PG2	2	1 1/2" 300# RFLWN **	P.G.	

** WITH BLIND FLANGE, BOLTING AND GASKETS

SERIAL No.: X-7265 C 2 1
CUSTOMER: O-COK / GIANT INDUSTRIES
P.O. NO.: 56603-P-12-04
ITEM NO.: E-645 C 2 1
SERVICE: DEBUTANIZER FEED BOTTOMS EXCHANGER
SHIP TO: GRAFTON, VA

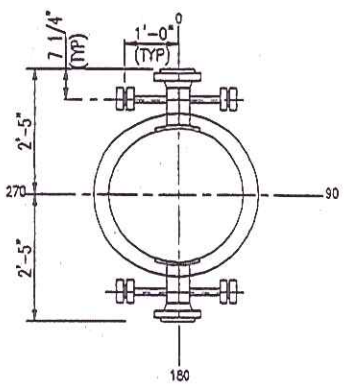

VIEW A-A

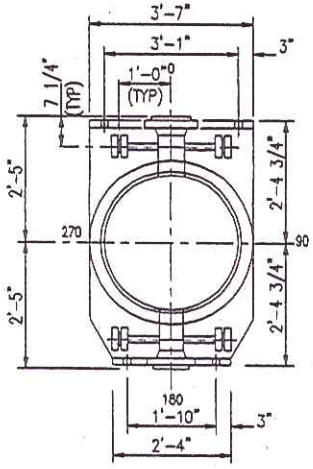

SECTION B-B

CERTIFIED CORRECT FOR FABRICATION

BY: GLENN HEITKAMP DATE: 11/7/06

NO.	DATE	REVISIONS
3	1/18/07	REV. PER CUSTOMER COMMENTS Dan/
2	12/7/06	REV. PER CUSTOMER COMMENTS Dan/DD
1	10/4/06	REV. PER CUSTOMER COMMENTS Dan/DD

ASSEMBLY AND SPECIFICATIONS FOR
ONE 34-240 A E U

DWN. BY Dove
DATE 9/11/06
CKD. BY GH

Energy Exchanger Co.
1844 No. Garnett Rd. • Tulsa, Okla.74116

DWG. NO. X-7265-A3 2 1 REV. 3

PROJECT TITLE: GIANT S 10RB
JOB No: 126653
Stone & Webster, Inc.
SSW 126653-P-12-04 (TIID-01) ISSUE:
EQUIPMENT No.: 56603-P-12-04 (TIID-01)
FOR INFORMATION ☐ ACCEPTED FOR CIVIL AND PIPING IFC
ACCEPTED ☐ ACCEPTED AS CERTIFIED
ACCEPTED AS NOTED ☐ REVISE AND RESUBMIT
SIGNED:
DATE:
THE ACCEPTANCE OF THIS DATA BY SHAW STONE & WEBSTER DOES NOT RELIEVE THE CONTRACTOR OR SUPPLIER FROM THE OBLIGATIONS IMPOSED BY THE PURCHASER ORDER OR CONTRACT.

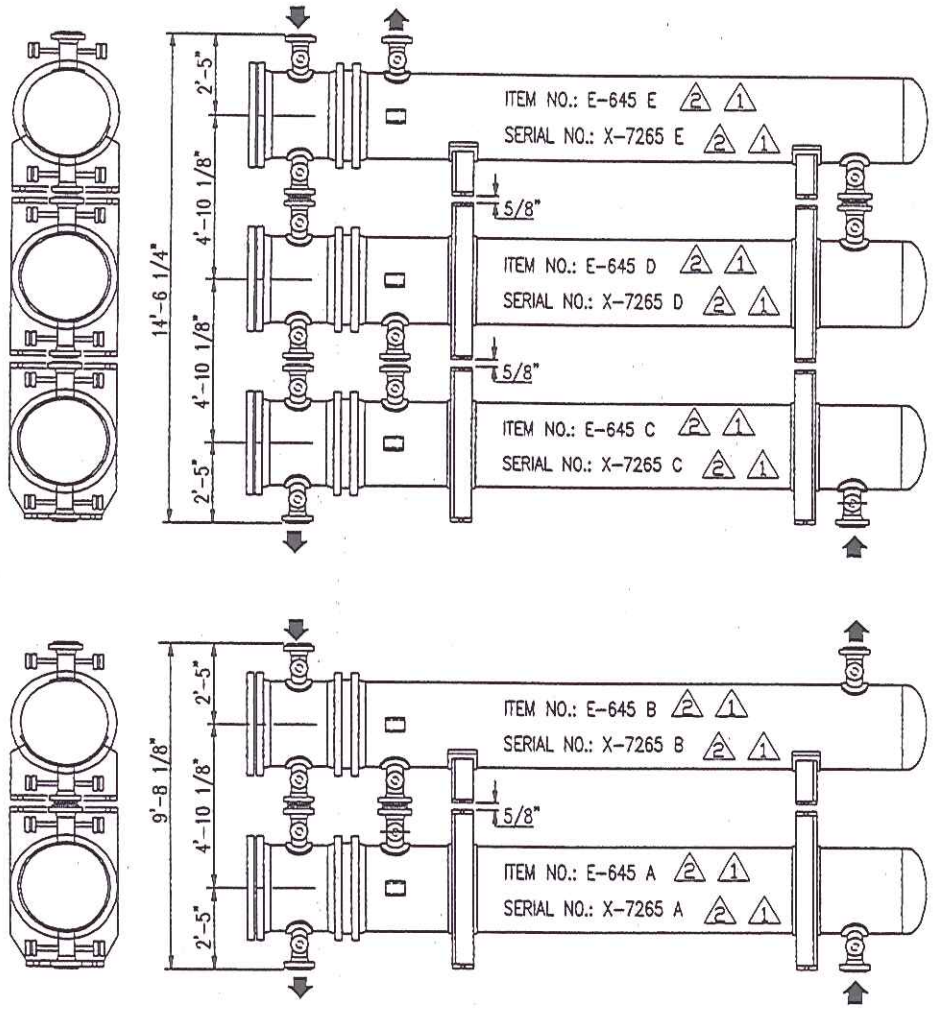

CERTIFIED AS-BUILT
D. DiCarlo 4/24/07

SERIAL NO.: X-7265-A, B, C, D, E
CUSTOMER: D-COK / GIANT INDUSTRIES
P. O. NO.: 56603-P-12-04
△1 ITEM NO.: E-645 A, B, C, D, E
SERVICE: DEBUTANIZER FEED BOTTOMS EXCHANGER
SHIP TO: GRAFTON, VA

Shaw Stone & Webster, Inc.	PROJECT TITLE: GIANT S ZORB
	JOB No.: 120653
SSW: 120653-P-12-04 (T110-01)	ISSUE:
EQUIPMENT No.: 56603-P-12-04 (T110-01)	
☐ FOR INFORMATION	☐ ACCEPTED FOR CIVIL AND PIPING IFC
☐ ACCEPTED	☐ ACCEPTED AS CERTIFIED
☐ ACCEPTED AS NOTED	☐ REVISE AND RESUBMIT
SIGNED:	
DATE:	

THE ACCEPTANCE OF THIS DATA BY SHAW STONE & WEBSTER DOES NOT RELIEVE THE CONTRACTOR OR SUPPLIER FROM THE OBLIGATIONS IMPOSED BY THE PURCHASER ORDER OR CONTRACT.

NOTE:
1) SHIMS, GASKETS & BOLTING FOR STACKING SHALL BE FURNISHED BY ENERGY.
2) HYDROTEST IN THE STACKED POSITION.

NO.	DATE	REVISIONS
△2	12/18/06	REV. PER CUSTOMER COMMENTS Dan/DD
△1	10/10/06	REV. PER CUSTOMER COMMENTS Dan/DD

STACKING ARRANGEMENTS

DWN. BY	Dave
DATE	8/12/06
CKD. BY	GH
DWG. NO.	X-7265-A6 △2 △1
REV.	2

Energy Exchanger Co.
1544 No. Garnett Rd. • Tulsa, Okla.74116

COVER NOTES:

1) MACHINE ALL COVER SURFACES TO 250 AARH, EXCEPT GASKET SURFACES MACHINE TO 125 AARH.
2) ALL COVER PASS PLATE GROOVE WIDTHS SHALL BE 1/2".
3) ALL COVER PASS PLATE GROOVE JUNCTIONS SHALL BE NOTCHED 3/8" @ 45°.

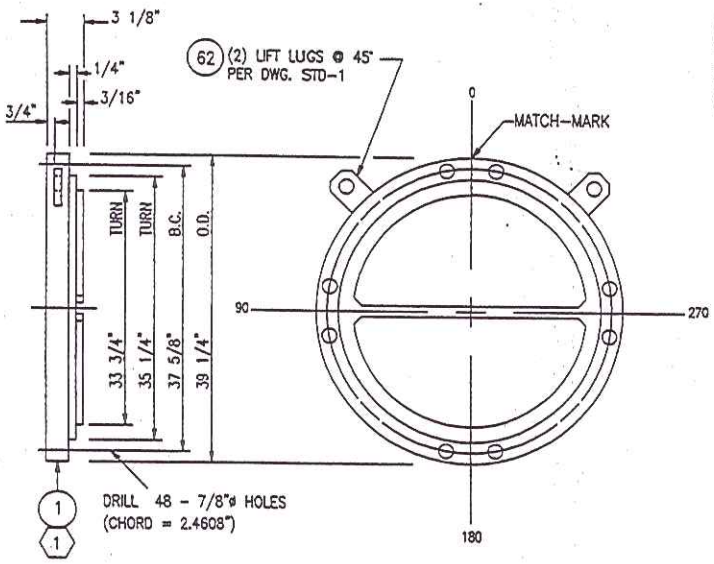

CHANNEL COVER DETAIL

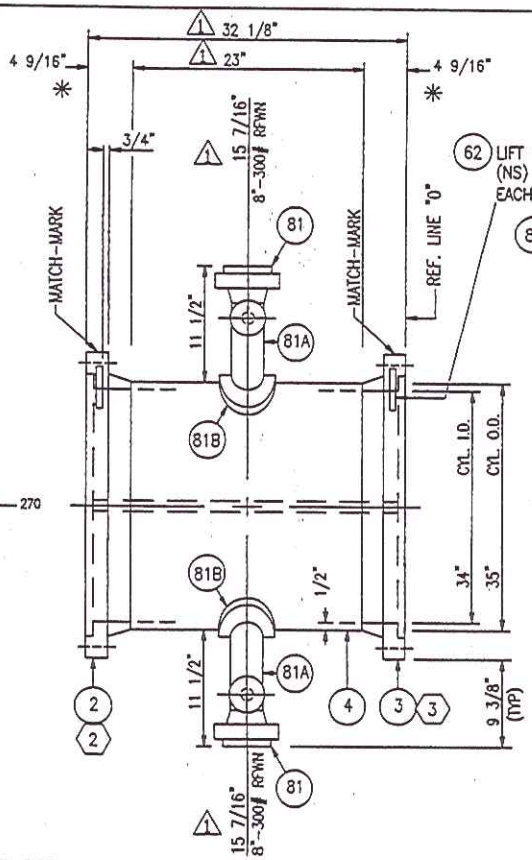

CHANNEL SIDE VIEW

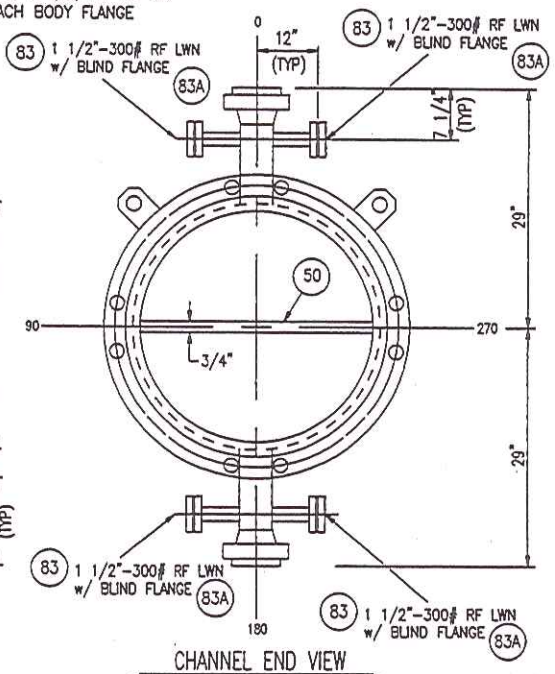

CHANNEL END VIEW

SHOP NOTE:

84 EACH WELD PAD SHALL HAVE A 1/4"-STD. WT. PIPE x 4" LG. INSTALLED AFTER HYDRO TEST. PLUG WITH STIFF GREASE.

NOTES:

1) FOR WELD & BEVEL DETAILS, SEE DWG STD-1.
2) FOR BODY FLANGE DETAILS, SEE DWG. X-7265-M.
3) FOR FABRICATION NOTES, SEE DWG. X-7265-N.
4) MILL PASS PLATES TO 3/8", BOTH ENDS.

REQUIRED AS SHOWN FOR ONE UNIT; FIVE-UNITS REQUIRED.

CERTIFIED AS-BUILT
D. DiCarlo 4/24/07

NO.	DATE	REVISIONS
1	12/18/06	REV. PER CUSTOMER COMMENTS Dan

SERIAL NO.: X-7265-A/B/C/D/E
CUSTOMER: D-COK / GIANT INDUSTRIES
P. O. NO.: 56603-P-12-04
ITEM NO.: E-645 A/B/C/D/E
SERVICE: DEBUTANIZER FEED BOTTOMS EXCHANGER
SHIP TO: GRAFTON, VA

CHANNEL DETAILS

DWN. BY Dan
DATE 10/10/06
CKD. BY DiCarlo
DWG. NO. X-7265-B
REV. 1

Energy Exchanger Co.
1844 No. Garnett Rd. • Tulsa, Okla.74116

Shaw Stone & Webster, Inc

PROJECT TITLED GIANT S 2008
JOB No. 120653
ISSUE :
SSW 120653-P-12-04 (T110-01)
EQUIPMENT No. : 56603-P-12-04 (T110-01)

☐ FOR INFORMATION
☐ ACCEPTED
☐ ACCEPTED AS NOTED
☐ ACCEPTED FOR CIVIL AND PIPING ETC
☐ ACCEPTED AS CERTIFIED
☐ REVISE AND RESUBMIT

SIGNED :
DATE :

THE ACCEPTANCE OF THIS DATA BY SHAW STONE & WEBSTER DOES NOT RELIEVE THE CONTRACTOR OR SUPPLIER FROM THE OBLIGATIONS IMPOSED BY THE PURCHASER ORDER OR CONTRACT.

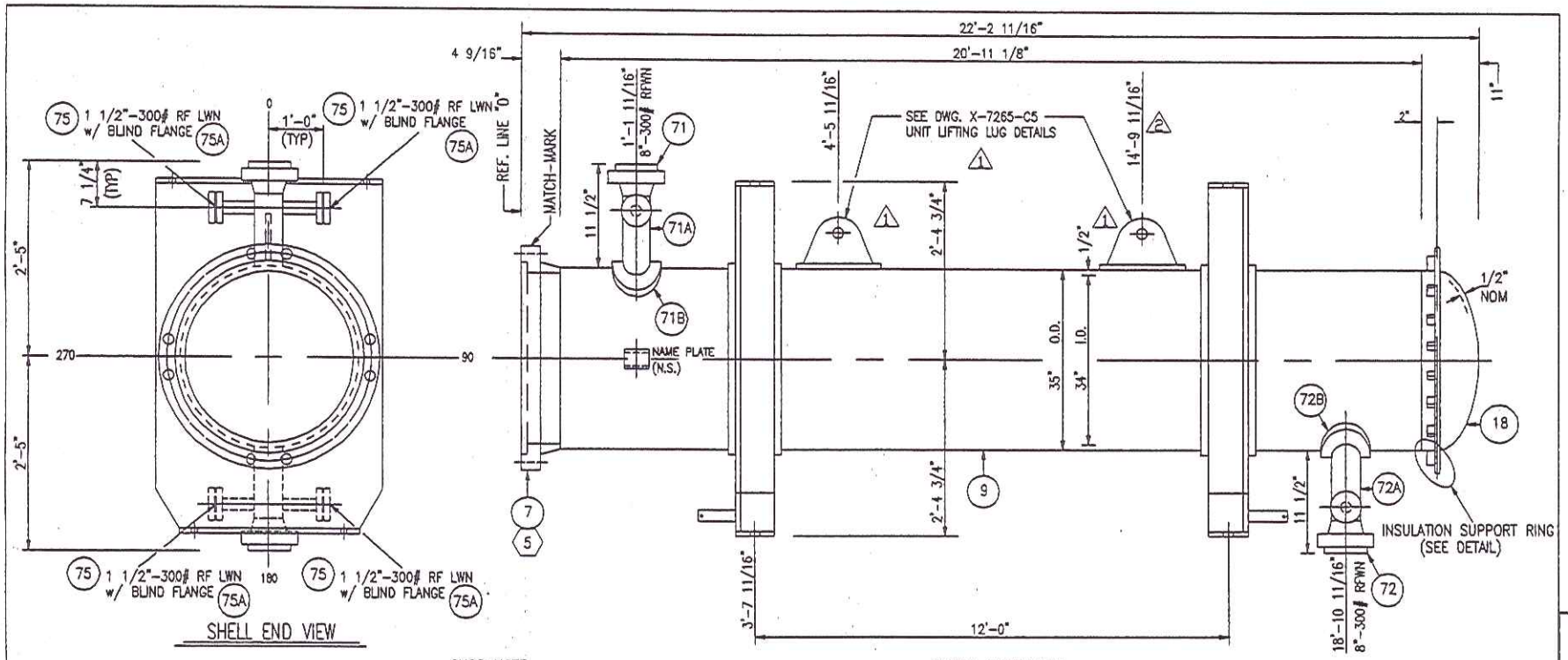

SHELL END VIEW

SHELL SIDE VIEW

SHOP NOTE:
76 EACH WELD PAD SHALL HAVE A 1/4"-STD. WT. PIPE x 3 1/2" LG. INSTALLED AFTER HYDRO TEST. PLUG WITH STIFF GREASE.

NOTES:
1) FOR WELD & BEVEL DETAILS, SEE DWG. STD-1.
2) ALL BOLT HOLES TO STRADDLE CENTERLINES.
3) FOR SUPPORT DETAILS, SEE DWG. X-7265-D3.
4) FOR BODY FLANGE DETAILS, SEE DWG. X-7265-M.
5) FOR FABRICATION NOTES, SEE DWG. X-7265-N.

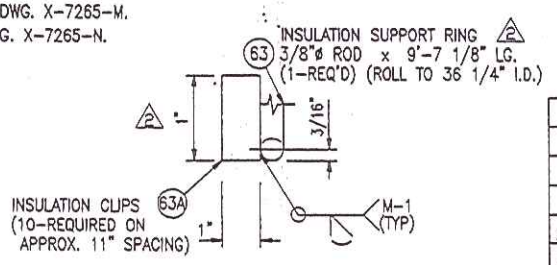

INSULATION SUPPORT RING

REQUIRED AS SHOWN FOR ONE UNIT; TWO-UNITS REQUIRED.

CERTIFIED AS-BUILT
D. DiCarlo 4/24/07

SERIAL NO.: X-7265-A & C
CUSTOMER: D-COK / GIANT INDUSTRIES
P. O. NO.: 56603-P-12-04
ITEM NO.: E-645 A & C
SERVICE: DEBUTANIZER FEED BOTTOMS EXCHANGER
SHIP TO: GRAFTON, VA

NO.	DATE	REVISIONS
2	1/18/07	REV. PER CUSTOMER COMMENTS Dan/DD
1	12/7/06	REV. PER CUSTOMER COMMENTS Dan/DD

SHELL DETAILS

DWN. BY Dan
DATE 10/10/06
CKD. BY DiCarlo
DWG. NO. X-7265-C1
REV. 2

Energy Exchanger Co.
1044 No. Garnett Rd. • Tulsa, Okla.74116

PROJECT TITLED GIANT S ZORB
JOB No. 120553
Stone & Webster, Inc.
SSV: 126553-P-12-04 (TUB-01)
ISSUE:
EQUIPMENT No.: 56603-P-12-04 (TUB-01)
☐ FOR INFORMATION ☐ ACCEPTED FOR CIVIL AND PIPING DFC
☐ ACCEPTED ☐ ACCEPTED AS CERTIFIED
☐ ACCEPTED AS NOTED ☐ REVISE AND RESUBMIT
SIGNED:
DATE:
THE ACCEPTANCE OF THIS DATA BY SHAW STONE & WEBSTER DOES NOT RELIEVE THE CONTRACTOR OR SUPPLIER FROM THE OBLIGATIONS IMPOSED BY THE PURCHASER ORDER OR CONTRACT.

TIE RODS
1/2" O.D.
W/ 1/2" PIPE (SCH. 40) SPACERS
8-REQ'D, TOTAL

DUMMY TUBES
(BAFFLES ONLY)
3/4" O.D.
7-REQ'D, TOTAL

SEAL BAR NOTES:
1) CUT SLOTS IN BAFFLES ONLY.
2) CUT SLOTS 5/16" WIDE.
3) CUT SLOT DEPTHS [SEAL BAR WIDTH + 1/16"] FROM OUTSIDE EDGE OF SLOT.

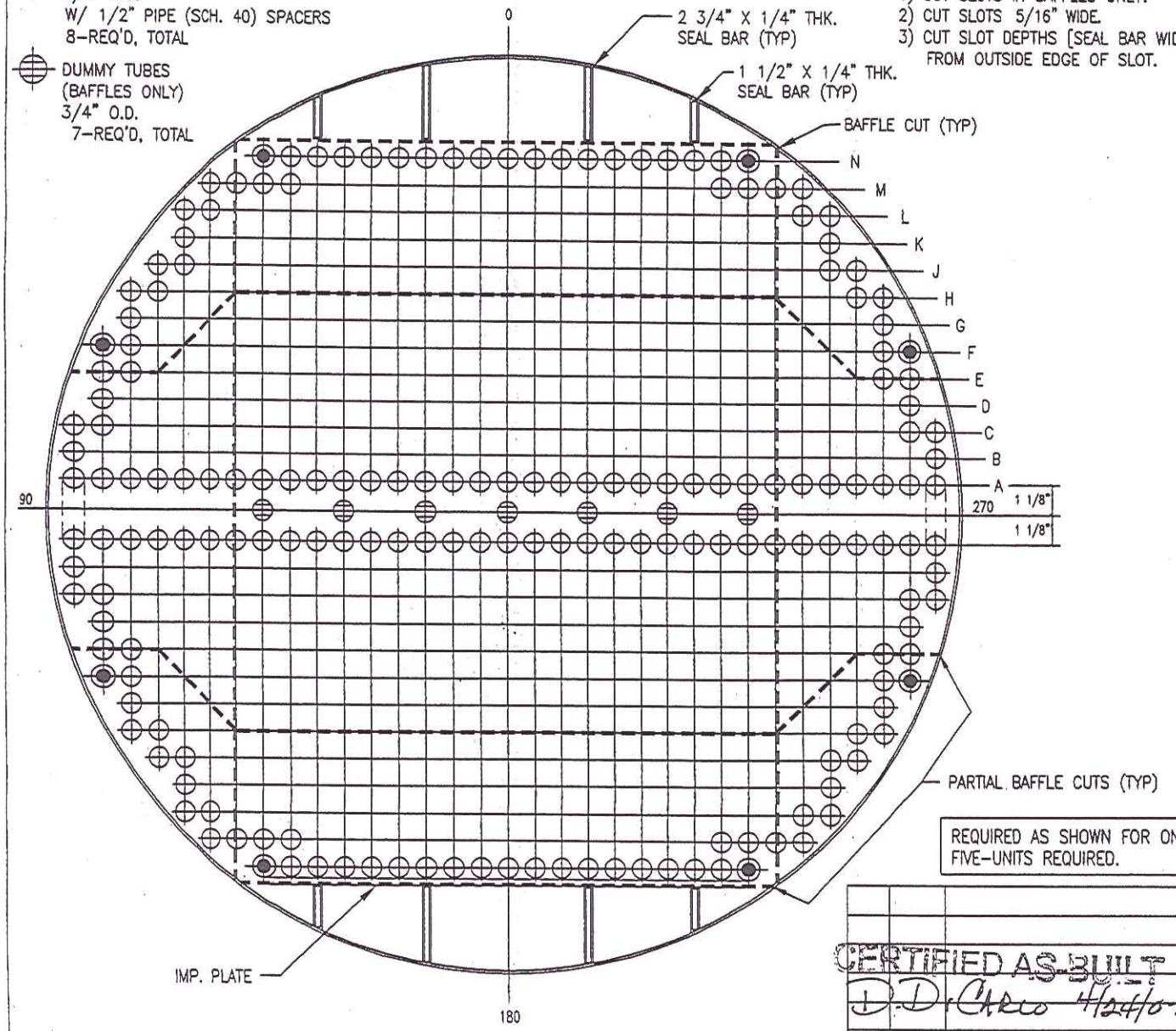

VIEW LOOKING AT SHELL SIDE OF NO. #4 TUBESHEET

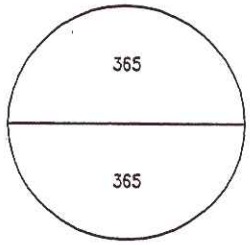

TUBE DISTRIBUTION

NOTES:
1) DRILL AND REAM TUBE HOLES IN TUBESHEET TO 0.760" + 0.002", − 0.004" DIA. FOR 365 − 3/4" O.D. U-TUBES. TOTAL HOLES = 730.
2) TUBE PITCH = 1" SQUARE.
3) NUMBER OF PASSES = 2.
4) SEE DRAWING X-7265-E FOR TUBE GROOVING DETAILS.
5) BAFFLE O.D. = 33 13/16".
6) O.T.L. = 33 1/2".

SERIAL NO.: X-7265-A, B, C, D, E
CUSTOMER: D-COK / GIANT INDUSTRIES
P. O. NO.: 56603-P-12-04
ITEM NO.: E-645 A, B, C, D, E
SERVICE: DEBUTANIZER FEED BOTTOMS EXCHANGER
SHIP TO: GRAFTON, VA

REQUIRED AS SHOWN FOR ONE UNIT; FIVE-UNITS REQUIRED.

NO.	DATE	REVISIONS

CERTIFIED AS-BUILT
D.D. Cirio 4/24/07

Shaw Stone & Webster, Inc.

PROJECT TITLE: GIANT S ZORB
JOB No.: 120653
SSV: 120653-P-12-04 (T110-01)
ISSUE:
EQUIPMENT No.: 56603-P-12-04 (T110-01)

- [ ] FOR INFORMATION
- [ ] ACCEPTED
- [ ] ACCEPTED AS NOTED
- [ ] ACCEPTED FOR CIVIL AND PIPING IFC
- [ ] ACCEPTED AS CERTIFIED
- [ ] REVISE AND RESUBMIT

SIGNED:
DATE:

THE ACCEPTANCE OF THIS DATA BY SHAW STONE & WEBSTER DOES NOT RELIEVE THE CONTRACTOR OR SUPPLIER FROM THE OBLIGATIONS IMPOSED BY THE PURCHASER ORDER OR CONTRACT.

TUBE LAYOUT

DWN. BY: Dave
DATE: 9/11/06
CKD. BY: DiCarlo

Energy Exchanger Co.
1544 No. Garnett Rd. • Tulsa, Okla.74116

DWG. NO.: X-7265-F
REV.: 0

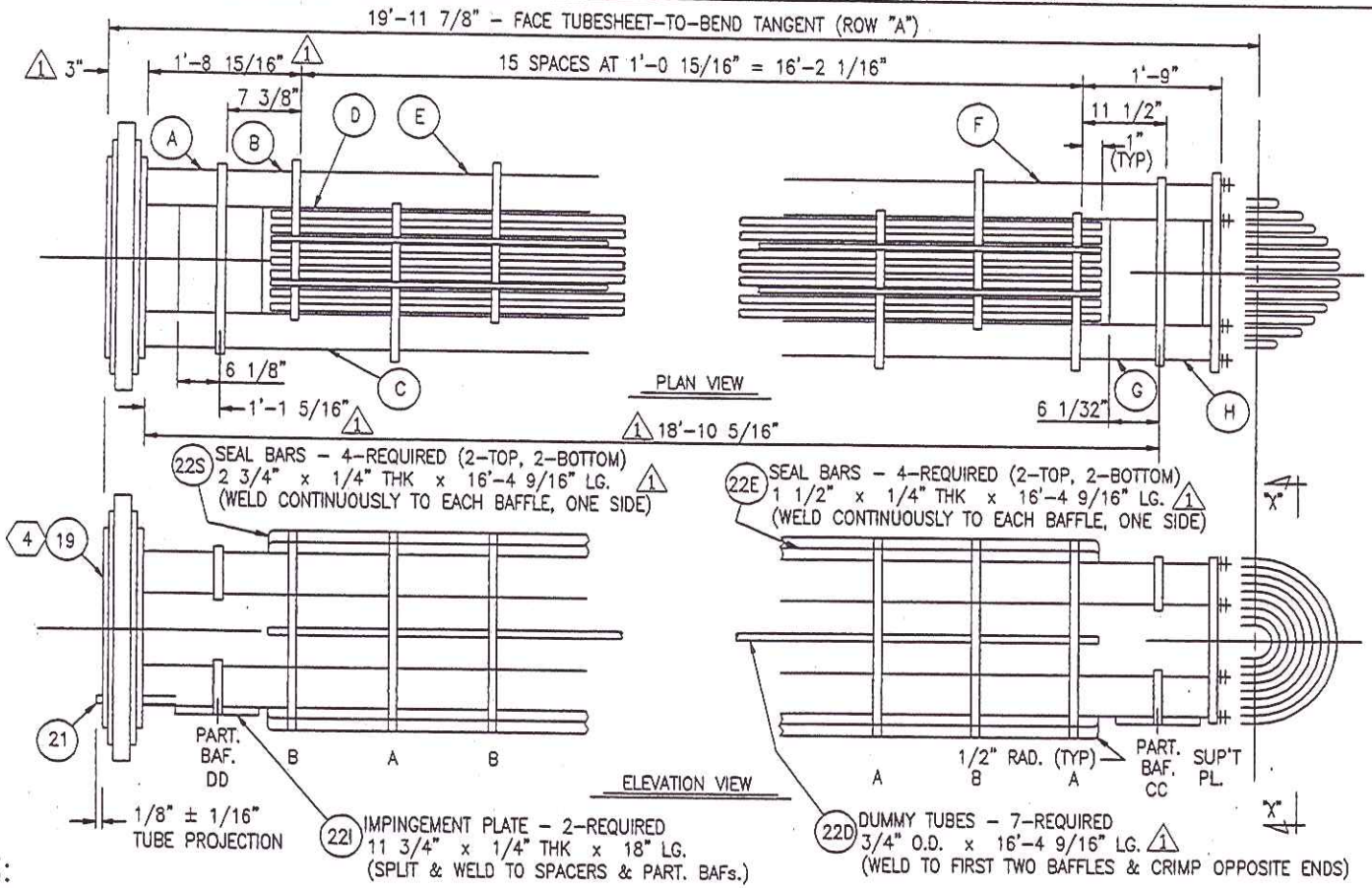

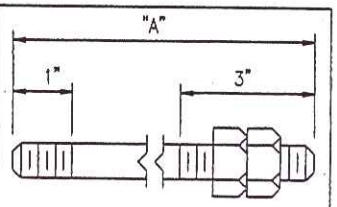

1/2" O.D. TIE RODS (23)

REQ'D	"A"
8	19'-10 1/4"

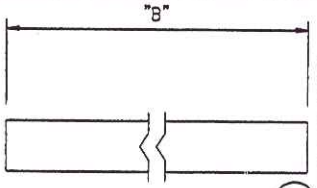

(23A)

1/2"-Sch. 40 PIPE SPACERS

	REQ'D	"B"
1	(A) 8	13 1/16"
1	(B) 6	6 7/8"
1	(C) 2	19 13/16"
1	(D) 60	12 7/16"
1	(E) 28	25 3/8"
1	(F) 2	23 15/16"
1	(G) 6	11"
	(H) 8	9"

NOTES:

1) FOR SECTION AND VIEW DETAILS, SEE DWG. X-7265-J.

REQUIRED AS SHOWN FOR ONE UNIT; FIVE-UNITS REQUIRED.

SERIAL NO.: X-7265-A, B, C, D, E
CUSTOMER: D-COK / GIANT INDUSTRIES
P. O. NO.: 56603-P-12-04
ITEM NO.: E-645 A, B, C, D, E
SERVICE: DEBUTANIZER FEED BOTTOMS EXCHANGER
SHIP TO: GRAFTON, VA

Shaw Stone & Webster, Inc.

PROJECT TITLE: GIANT S ZORB
JOB No.: 120653
SSW: 120653-P-12-04 (T110-01)
ISSUE:
EQUIPMENT No.: 56603-P-12-04 (T110-01)

- [ ] FOR INFORMATION
- [ ] ACCEPTED
- [ ] ACCEPTED AS NOTED
- [ ] ACCEPTED FOR CIVIL AND PIPING IFC
- [ ] ACCEPTED AS CERTIFIED
- [ ] REVISE AND RESUBMIT

SIGNED:
DATE:

THE ACCEPTANCE OF THIS DATA BY SHAW STONE & WEBSTER DOES NOT RELIEVE THE CONTRACTOR OR SUPPLIER FROM THE OBLIGATIONS IMPOSED BY THE PURCHASER ORDER OR CONTRACT.

CERTIFIED AS BUILT
D. DiCarlo 4/24/07

NO.	DATE	REVISIONS	
1	12/7/06	REV. PER CUSTOMER & E.E.C.	Dan

BUNDLE DETAILS

DWN. BY: Dan
DATE: 10/10/06
CKD. BY: DiCarlo

Energy Exchanger Co.
1844 No. Garnett Rd. • Tulsa, OKla.74116

DWG. NO.: X-7265-H
REV.: 1

FORM U-1 MANUFACTURER'S DATA REPORT FOR PRESSURE VESSELS
As Required by the Provisions of the ASME Code Rules, Section VIII, Division 1

1. Manufactured and certified by ENERGY EXCHANGER COMPANY, 1844 NORTH GARNETT ROAD TULSA, OK 74116
(Name and address of Manufacturer)

2. Manufactured for D-COK LLC, 3657 BRIAR PARK DRIVE, HOUSTON, TEXAS 77042-5205
(Name and address of Purchaser)

Location of installation GIANT INDUSTRIES, GRAFTON, VIRGINIA
(Name and address)

4. Type: HORIZONTAL (Horiz., vert., or sphere) | HEAT EXCHANGER (Tank, separator, jkt. vessel, heat exh., etc.) | X-7265-C (Mfg's serial No.) | (CRN) | X-7265-A3 REV. 3 (Drawing No.) | 5259 (Nat'l. Bd. No.) | 2007 (Year built)

5. ASME Code, Section VIII, Div. 1 | 2004 EDITION, 2005 ADDENDA (Edition and Addenda (date)) | 2519 (Code Case No.) | (Special Service per UG-120(d))

Items 6 - 11 incl. to be completed for single wall vessels, jackets of jacketed vessels, shell of heat exchangers, or chamber of multi-chamber vessels.

6. Shell (a) No. of course(s): 3 (b) Overall length (ft & in.): 20'-11 1/8"

Course(s)			Material	Thickness		Long. Joint (Cat. A)			Circum. Joint (Cat. A, B & C)			Heat Treatment	
No.	Diameter, in.	Length (ft & in.)	Spec./Grade or Type	Nom.	Corr.	Type	Full, Spot, None	Eff.	Type	Full, Spot, None	Eff.	Temp.	Time
2	34" I.D.	8'-0"	SA-516-70	1/2"	1/8"	1	SPOT	.85	1	SPOT	.85	---	---
1	34" I.D.	4'-11 1/8"	SA-516-70	1/2"	1/8"	1	SPOT	.85	1	SPOT	.85	---	---

7. Heads: (a) SA-516-70 (Mat'l Spec. No., Grade or Type) H.T. - Time & Temp (b) (Mat'l Spec. No., Grade or Type) H.T. - Time & Temp

	Location (Top, Bottom, Ends)	Thickness		Radius		Elliptical Ratio	Conical Apex Angle	Hemispherical Radius	Flat Diameter	Side to Pressure		Category A		
		Min.	Corr.	Crown	Knuckle					Convex	Concave	Type	Full, Spot, None	Eff.
(a)	END	7/16"	1/8"			2:1					X	S	NONE	1.0
(b)														

If removable, bolts used (describe other fastening) (Mat'l Spec. No., Grade, size, No.)

8. Type of jacket Jacket closure (Describe as ogee & weld, bar, etc.)

If bar, give dimensions If bolted, describe or sketch.

9. MAWP 314 (internal) 15 (external) psi at max. temp. 450 (internal) 366 (external) °F Min. design metal temp. 0 °F at 314 psi.

Impact test NO; SHELL SIDE DESIGNED PER UCS-66(a)(c)(g) & UG-20(f) at test temperature of --- °F
(Indicate yes or no and the component(s) impact tested)

11. Hydro., ~~pneu~~, ~~combin~~. test press. 408 PSIG Proof test ---

Items 12 and 13 to be completed for tube sections.

12. Tubesheet: SA-516-70N (Stationary (Mat'l Spec. No.)) | 34 3/4 (Dia., in. (subject to press.)) | 3" (Nom. thk., in.) | 5/16 (Corr. Allow., in.) | BOLTED (Attachment (welded or bolted))

Floating (Mat'l Spec. No.) | Dia., in. | Nom. thk., in. | Corr. Allow., in. | Attachment

13. Tubes: SA-179 (Mat'l Spec. No., Grade or Type) | 3/4 (O.D., in.) | .083" (MIN) (Nom. thk., in. or gauge) | 365 (Number) | U (Type (Straight or U))

Items 14 - 18 incl. to be completed for inner chambers of jacketed vessels or channels of heat exchangers.

14. Shell (a) No. of course(s): 1 (b) Overall length (ft & in.): 1'-11"

Course(s)			Material	Thickness		Long. Joint (Cat. A)			Circum. Joint (Cat. A, B & C)			Heat Treatment	
No.	Diameter, in.	Length (ft & in.)	Spec./Grade or Type	Nom.	Corr.	Type	Full, Spot, None	Eff.	Type	Full, Spot, None	Eff.	Temp.	Time
1	34" I.D.	1'-11"	SA-516-70	1/2"	1/8"	1	SPOT	.85	1	SPOT	.85	---	---

15. Heads: (a) SA-516-70N (Mat'l Spec. No., Grade or Type) H.T. - Time & Temp (b) (Mat'l Spec. No., Grade or Type) H.T. - Time & Temp

	Location (Top, Bottom, Ends)	Thickness		Radius		Elliptical Ratio	Conical Apex Angle	Hemispherical Radius	Flat Diameter	Side to Pressure		Category A		
		Min.	Corr.	Crown	Knuckle					Convex	Concave	Type	Full, Spot, None	Eff.
(a)	END	3 1/8"	3/16"						34 3/4"					
(b)														

If removable, bolts used (describe other fastening) (a) SA-193-B7, 3/4", 48,; CHAN-TO-SHELL: SA-193-B7, 3/4", 48
(Mat'l Spec. No., Grade, Size, No.)

16. MAWP 301 (internal) 15 (external) psi at max. temp. 480 (internal) 366 (external) °F Min. design metal temp. 0 °F at 301 psi.

17. Impact test NO; CHANNEL SIDE DESIGNED PER UCS-66(a)(c)(g) & UG-20(f) at test temperature of --- °F
(Indicate yes or no and the component(s) impact tested)

18. Hydro., ~~pneu.~~, ~~combin.~~ test press. 391 PSIG Proof test ---

19. Nozzles, inspection, and safety valve openings:

Purpose (Inlet, Outlet, Drain, etc.)	No.	Diameter or Size	Flange Type	Material		Nozzle Thickness		Reinforcement Material	How Attached		Location (Insp. Open.)
				Nozzle	Flange	Nom.	Corr.		Nozzle	Flange	
INLET/OUTLET	1/1	8"-300#	RFWN	SA-106-B	SA-105	.500"	1/8"	SA-516-70	WELDED	WELDED	CHANNEL
T.W/P.G.	2/2	1½" 300#	RFLWN	SA-105	---	.630"	1/8"	WELD	WELDED	---	CH. NOZS.
INLET/OUTLET	1/1	8"-300#	RFWN	SA-106-B	SA-105	.500"	1/8"	SA-516-70	WELDED	WELDED	SHELL
T.W./ P.G.	2/2	1½" 300#	RFLWN	SA-105	---	.630"	1/8"	WELD	WELDED	---	SH. NOZS.

20. Supports: Skirt NO (Yes or No) Lugs --- (No.) Legs --- (No.) Others (2) BELLY BANDS (Describe) Attached SHELL; WELDED (Where and How)

21. Manufacturer's Partial Data Reports properly identified and signed by Commissioned Inspectors have been furnished for the following items of the report:
(List the name of part, item number, mfg's. name and identifying number)

22. Remarks: SERVICE: DEBUTANIZER FEED BOTTOMS EXCHANGER, P.O. NO: 56603-P-12-04, ITEM NO: E-645 C, SIZE: 34-240, TYPE: AEU
TUBES DESIGNED W/ 0" C.A. PRESSURE RELIEF DEVICES PROVIDED BY OTHERS.
LINES 6-11 INCLUDE (1) 39 1/4 O.D. x 34 I.D. x 4 9/16" THK., SA-105N, RING
LINES 14-18 INCLUDE (2) 39 1/4" O.D. x 34" I.D. x 4 9/16" THK., SA-105N, RING;

CERTIFICATE OF SHOP COMPLIANCE

We certify that the statements made in this report are correct and that all details of design, material, construction, and workmanship of this vessel conform to the ASME Code for Pressure Vessels, Section VIII, Division 1,
U Certificate of Authorization No. 12370 Expires 9/27/2007

Date 3-12-07 Name ENERGY EXCHANGER COMPANY (Manufacturer) Signed [signature] (Representative)

CERTIFICATE OF SHOP INSPECTION

I, the undersigned, holding a valid commission issued by The National Board of Boiler and Pressure Vessel Inspectors and the State or Province of OKLAHOMA and employed by OneBeacon America Insurance Company of BOSTON, MASS. have inspected the pressure vessel described in this Manufacturer's Data Report on 3-12-07, and state that, to the best of my knowledge and belief, the Manufacturer has constructed this pressure vessel in accordance with ASME Code, Section VIII, Division 1. By signing this certificate neither the Inspector nor his employer makes any warranty, expressed or implied, concerning the pressure vessel described in this Manufacturer's Data Report. Furthermore, neither the inspector nor his employer shall be liable in any manner for any personal injury or property damage or a loss of any kind arising from or connected with this inspection.

Date 3-12-07 Signed [signature] (Authorized Inspector) Commissions N.B.# 11921 BA OKLA.# 823 (Nat'l Board incl. endorsement, State, Province and No.)

CERTIFICATE OF FIELD ASSEMBLY COMPLIANCE

We certify that the statements on this report are correct and that the field assembly construction of all parts of this vessel conforms with the requirements of ASME Code, Section VIII, Division 1,
U Certificate of Authorization No. _____ Expires _____

Date _____ Name _____ (Assembler) Signed _____ (Representative)

CERTIFICATE OF FIELD ASSEMBLY INSPECTION

I, the undersigned, holding a valid commission issued by The National Board of Boiler and Pressure Vessel Inspectors and the State or Province of _____ and employed by _____ of _____ have compared the statements in this Manufacturer's Data Report with the described pressure vessel and state that parts referred to as data items _____, not included in the certificate of shop inspection, have been inspected by me and to the best of my knowledge and belief, the Manufacturer has constructed and assembled this pressure vessel in accordance with ASME Code, Section VIII, Division 1. The described vessel was inspected and subjected to a hydrostatic test of _____ psi. By signing this certificate neither the Inspector nor his employer makes any warranty, expressed or implied, concerning the pressure vessel described in this Manufacturer's Data Report. Furthermore, neither the Inspector nor his employer shall be liable in any manner for any personal injury or property damage or a loss of any kind arising from or connected with this inspection.

Date _____ Signed _____ (Authorized Inspector) Commissions _____ (Nat'l Board incl. endorsement, State, Province and No.)

NB 5259

CERTIFIED BY

Energy Exchanger Company

TULSA, OKLAHOMA

U

W

RT 4

MAWP SHELL	314 *	P.S.I.G. @	450 *	°F	408	TEST P.S.I.G.
MAWP TUBE	301 *	P.S.I.G. @	480 *	°F	391	TEST P.S.I.G.
MIN. DESIGN METAL TEMP.		SHELL	0	°F @	314 *	P.S.I.G.
		TUBE	0	°F @	301 *	P.S.I.G.

SERIAL NO. X-7265 C YEAR BUILT 2007

P.O. NO. 56603-P-12-04

SERIVCE DEBUTANIZER FEED BOTTOMS EXCHANGER

ITEM TE-645 C SIZE 34-240 TYPE AEU

* MAX. ALLOW. EXT. PRESS. = 15 PSIG @ 366° F

550

Jack Campbell