Energy Exchanger Company

105751

HEAT EXCHANGER SPECIFICATION SHEET

REV	LN #	
0	1	P.O. No.: 56603-P-12-04
0	2	REV. 0 AS PURCHASED
1	3	Customer: SHAW STONE & WEBSTER (GIANT) — Job No.: X-7262 "AS BUILT"
1	4	Address: HOUSTON, TX — Rev.: 1 — Date: 3/13/07
	5	Plant Location: GRAFTON, VA — File: 06-6102
	6	Service of Unit: REACTOR FEED/EFFLUENT EXCHANGER — Item: E-641 A/B
	7	Size: 59-264 — Type: AFU — Horizontal — Connected In: 1 — Parallel: 2 — Series
	8	Surf./Unit [ ] Gross / [✓] Eff: 13140. ft²; Shells/Unit: 2 — Surf./Shell [ ] Gross [✓] Eff.: 6570. ft²
	9	PERFORMANCE OF ONE UNIT

LN #	Fluid Allocation	Shell Side				Tube Side			
10	Fluid Allocation	Shell Side				Tube Side			
11	Fluid Name	REACTOR EFFLUENT				REACTOR FEED			
12	Fluid Quantity, Total lb/hr								
13	Vapor (In/Out)								
14	Liquid								
15	Steam								
16	Water								
17	Noncondensable								
18	Temperature (In/Out) °F								
19	Density (Vapor/Liquid) Lb/Ft³								
20	Viscosity cP								
21	Molecular Weight								
22	Molecular Weight, Noncondensable								
23	Specific Heat Btu/lb-F								
24	Thermal Conductivity Btu/hr-ft-F								
25	Latent Heat Btu/lb								
26	Inlet Pressure psia								
27	Velocity ft/sec								
28	Pressure Drop, Allow./Calc. psi								
29	Fouling Resistance (Min.) Hr-Ft-°F/Btu								

30 Heat Exchanged — Btu/hr; M.T.D. (Corrected) °F

31 Transfer Rate, Service — Btu/hr-ft²-F; Clean Btu/hr-ft²-F

32 CONSTRUCTION OF ONE SHELL — Sketch (Bundle/Nozzle Orientation)

LN #			Shell Side	Tube Side
33			Shell Side	Tube Side
34	Design/Test Pressure	psig	495/FV/647	625/FV/813
35	Design Temperature (Max/Min)	°F	500/366/0	500/366/0
36	No. Passes Per Shell		2	2
37	Corrosion Allowance	inch	0.125	0.125
38	Connections Size & Rating	In	1 - 16" 600RF	1 - 12" 600RF
39		Out	1 - 14" 600RF	1 - 12" 600RF
40		Intermediate	1 - 12" 600RF	1 - 12" 600RF

41 Tube No. 785 U'S — OD .75 in; Thk. [✓] Min [ ] Avg 0.083 in; Length 22. ft; Pitch 1 in 90°

42 Tube Type: PLAIN — Material: SA-179

43 Shell: SA-516-70 [✓] ID [ ] OD 59 in ;Shell Cover: SA-350-LF2 [✓] Integ. [ ] Remov.

44 Channel or Bonnet: SA-516-70 (N) — Channel Cover: SA-516-70 (N) [ ] Integ. [✓] Remov.

45 Tubesheet-Stationary: SA-350-LF2 — Tubesheet - Floating

46 Floating Head Cover — Impingement Protection: Circular Pla ON BUNDLE

47 Baffles-Cross: 4 - SA-516-70 — Type: V-N.T.I.W. — % Cut ([✓] Dia. [ ] Area) 20.6 — Spacing c/c 50.7 — Inlet in

48 Baffles-Long: SA-516-70 — Seal Type: LAMIFLEX

49 Supports - Tube: SA-516-70 — U-Bend: YES — Type: FULL

50 Bypass Seal Arrangement: SA-516-70 — Tube-Tubesheet Joint: EXPANDED AND WELDED

51 Expansion Joint — Type

52 pv² - Inlet Nozzle — Bundle Entrance — Bundle Exit

53 Gaskets - Shell Side: S.S. D.J.F.G.F — Tube Side: S.S. D.J.F.G.F

54 - Floating Head

55 Code Requirements: ASME SECTION VIII, DIV. 1 CODE STAMP — TEMA Class: R

56 Weight/Shell: 76,700 lb. EACH — Filled With Water: 109,250 lb. EACH — Bundle: 33,250 lb. EACH

57 REMARKS

58 (1) SHELLS A & B

59 (2) TWO INTERMEDIATE SUPPORTS PER BAFFLE SPACE (4) FOUR ROW PARTIAL SUPPORTS AT SHELL NOZZLE CENTERLINES

60 (3) PROVIDE (2) 1-1/2" X 600# RFLWN ON EACH OF INLET AND OUTLET (TUBESIDE AND SHELLSIDE) NOZZLES OF EACH INDIVIDUAL

61 SHELL (EXCHANGER).

62 (4) TIE ROD SPACER SLEEVES SHALL BE SCH. 40 PIPE THICKNESS.

63

64

65

#105751

Energy Exchanger Company

HEAT EXCHANGER SPECIFICATION SHEET

OVERALL FOR 6 SHELLS

P.O. No.: 56603-P-12-04

REV. 0 AS PURCHASED

REV	LN #								
0	1								
0	2								
1	3	Customer	SHAW STONE & WEBSTER (GIANT)				Job No.: X-7262/X-7263/X-7264 "AS BUILT"		
1	4	Address	HOUSTON, TX				Rev.: 1	Date:	3/13/07
	5	Plant Location	GRAFTON, VA				File:	06-6102	
	6	Service of Unit	REACTOR FEED/EFFLUENT EXCHANGER				Item: E-641 A/B/C/D/E/F		
	7	Size	59-264	Type	AFU	Horizontal	Connected In	1	Parallel 6 Series
	8	Surf./Unit	☐ Gross / ☑ Eff	38872. ft²; Shells/Unit	6	Surf./Shell	☐ Gross	☑ Eff.	6296/6570 ft²
	9	PERFORMANCE OF ONE UNIT							

		Shell Side				Tube Side			
10	Fluid Allocation	Shell Side				Tube Side			
11	Fluid Name	REACTOR EFFLUENT				REACTOR FEED			
12	Fluid Quantity, Total lb/hr	319572				317508			
13	Vapor (In/Out)	319572		25693		4682		317508	
14	Liquid			293879		312826			
15	Steam								
16	Water								
17	Noncondensable								
18	Temperature (In/Out) °F	799.		235.0		108.		699.	
19	Density (Vapor/Liquid) Lb/Ft³	2.0700		0.8700	39.02	0.3300	43.45	2.7600	
20	Viscosity cP	0.0220		0.0150	0.199	0.0090	0.353	0.0200	
21	Molecular Weight								
22	Molecular Weight, Noncondensable								
23	Specific Heat Btu/lb-F	0.7490		0.7620	0.599	1.8410	0.5050	0.7170	
24	Thermal Conductivity Btu/hr-ft-F	0.0380		0.0430	0.056	0.0790	0.0680	0.0340	
25	Latent Heat Btu/lb								
26	Inlet Pressure psia	409.7				498.7			
27	Velocity ft/sec					9.68			
28	Pressure Drop, Allow./Calc. psi	25.00	/	26.00		25.00	/	13.00	
29	Fouling Resistance (Min.) Hr-Ft-°F/Btu	0.002				0.005			

30	Heat Exchanged	148230000	Btu/hr; M.T.D. (Corrected)	80.73 °F
31	Transfer Rate, Service	47.23	Btu/hr-ft²-F; Clean	Btu/hr-ft²-F

	CONSTRUCTION OF ONE SHELL			Sketch (Bundle/Nozzle Orientation)
32				
33		Shell Side	Tube Side	
34	Design/Test Pressure psig			
35	Design Temperature (Max/Min) °F			
36	No. Passes Per Shell			
37	Corrosion Allowance inch			
38	Connections In			
39	Size & Out			
40	Rating Intermediate			

41	Tube No.	OD	in; Thk.	☐ Min	☐ Avg	in; Length	ft; Pitch	in				
42	Tube Type					Material						
43	Shell		☐ ID	☐ OD		in ;Shell Cover			☐ Integ.	☐ Remov.		
44	Channel or Bonnet					Channel Cover			☐ Integ.	☐ Remov.		
45	Tubesheet-Stationary					Tubesheet - Floating						
46	Floating Head Cover					Impingement Protection						
47	Baffles-Cross		Type			% Cut (☐ Dia. ☐ Area)		Spacing c/c		Inlet	in	
48	Baffles-Long					Seal Type						
49	Supports - Tube		U-Bend				Type					
50	Bypass Seal Arrangement					Tube-Tubesheet Joint						
51	Expansion Joint					Type						
52	pv² - Inlet Nozzle		Bundle Entrance				Bundle Exit					
53	Gaskets - Shell Side					Tube Side						
54	- Floating Head											
55	Code Requirements						TEMA Class					
56	Weight/Shell		Filled With Water				Bundle					

57 REMARKS

58 (1) OVERALL PERFORMANCE SHEET FOR SIX EXCHANGERS IN SERIES. SHELLS "E" & "F" HAVE 752U'S TO ALLOW ROOM FOR DERESONATING BAFFLES.
59 PLACE DERESONATING BAFFLES IN ALL BAFFLE SPACES BUT INLET AND OUTLET JUST ABOVE AND BELOW THE CENTER OF EACH HALF.
60 (2) DESIGN SHELLSIDE AND TUBESIDE TO BE HYDROGEN SERVICE.
61
62
63
64
65

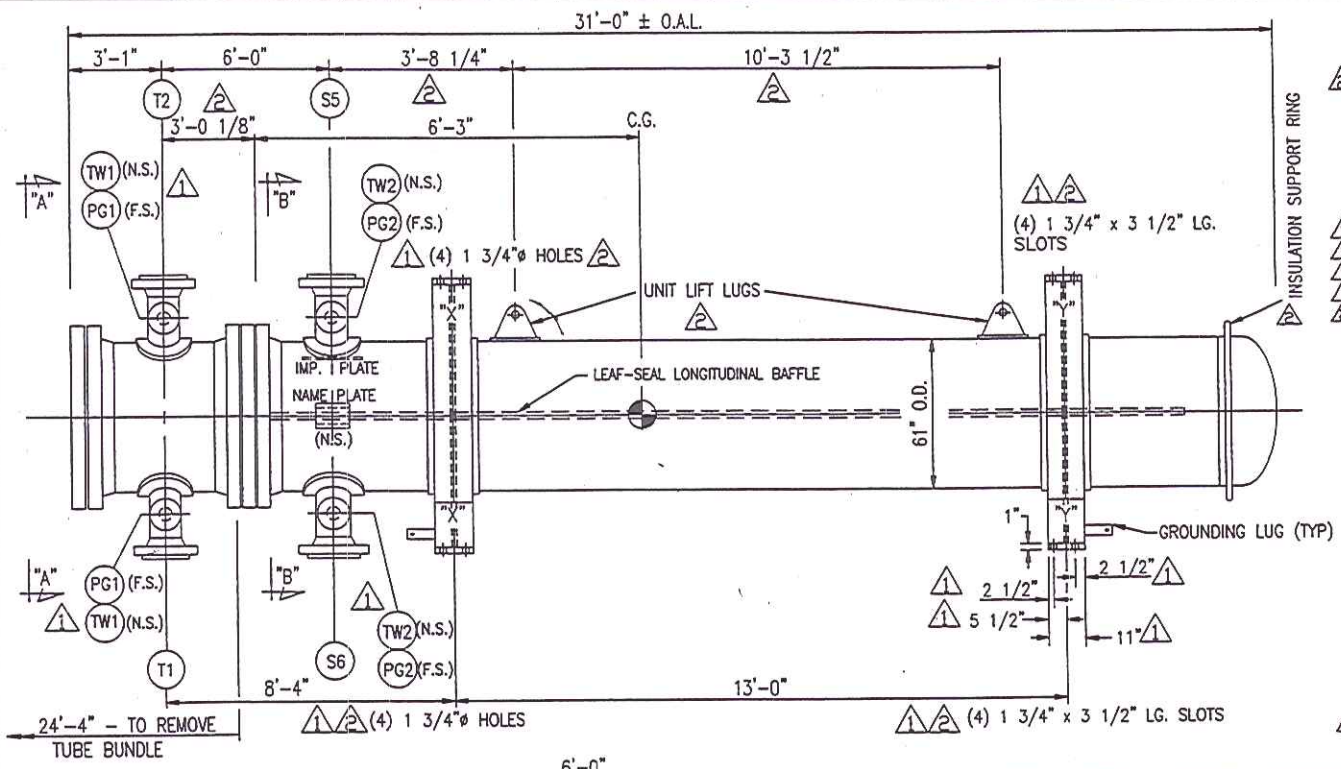

DESIGN DATA	SHELL	TUBE
DESIGN PRESSURE P.S.I.G.	495	625
VACUUM PRESSURE P.S.I.G.	FV @ 366°F	FV @ 366°F
TEST PRESSURE P.S.I.G.	729(SHOP)/647(FIELD)	813
DESIGN TEMP. Deg.F.	500	500
MDMT Deg. F.	0	0
CORROSION ALLOWANCE	1/8"	1/8"
NUMBER OF PASSES	2	2
RADIOGRAPHY	FULL	FULL
HEAT TREAT REQUIRED	NO	U-BENDS ONLY
M.A.W.P. (H&C) P.S.I.G.	497	625
LIMITED BY	BODY FLANGE	BODY FLANGE BOLTING
M.A.P. (N&C) P.S.I.G.	561	625
LIMITED BY	NOZ. REINF. AREA	BODY FLANGE BOLTING
INSULATION (BY OTHERS)	2"	1 1/2"

ESTIMATED WEIGHTS, LBS.

DRY: 76,700 BUNDLE: 33,250 WET: 109,250

SPECIFICATIONS

ASME CODE SECTION VIII, DIVISION 1, 2004 ED., 2005 ADD. (STAMP: YES). TEMA CLASS R, API-660 AND CUSTOMER SPECIFICATIONS APPLY. NATIONAL BOARD REGISTRATION REQUIRED.

MATERIAL

CHANNEL:	SA-516-70N
SHELL:	SA-516-70
TUBESHEETS:	SA-350-LF2,CL1
BAFFLES:	SA-516-70
TUBES:	SA-179
(785)	3/4" O.D. X .083" MW X 22'-0" STR. LGTH.
TUBE PITCH:	1" ☐ SURFACE: 6570 SQ. FT.

GENERAL NOTES

1) ALL BOLT HOLES TO STRADDLE NATURAL CENTERLINES.
2) GASKETS: 1/8" THK. 347 SS DBL. JACK., FLEXIBLE GRAPHITE FILLED.
3) TWO (2) SPARE SETS OF GASKETS REQUIRED.
4) PAINT: SEE PAINT MAP ON DWG. X-7262-AA.
5) THIS UNIT STACKS UNDER ITEM E-641B. SEE DWG. X-7262-A3 FOR STACKING ARRANGEMENT.
6) TUBES SHALL BE STRENGTH WELDED AND EXPANDED INTO TUBESHEET.
7) UNIT IS IN HYDROGEN SERVICE, BOTH SIDES.
8) NITROGEN PURGE IS REQUIRED.

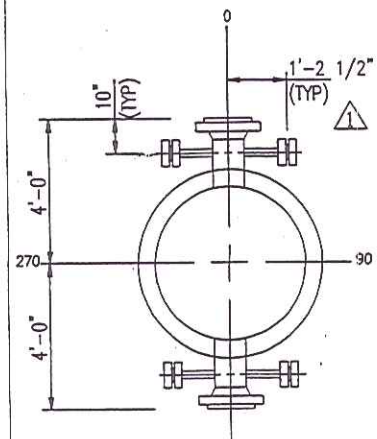

VIEW A-A

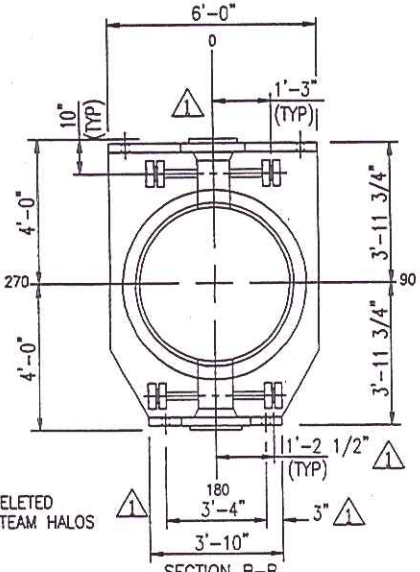

SECTION B-B

NOZZLE SCHEDULE

MK	QT	DESCRIPTION	PROCESS	AUXILIARIES
S5	1	14" 600# RF WN	INLET	SEE T.W. & P.G.
S6	1	12" 600# RF WN	OUTLET	SEE T.W. & P.G.
T1	1	12" 600# RF WN	INLET	SEE T.W. & P.G.
T2	1	12" 600# RF WN	OUTLET	SEE T.W. & P.G.
TW1	2	1 1/2" 600# RFLWN **	T.W.	
TW2	2	1 1/2" 600# RFLWN **	T.W.	
PG1	2	1 1/2" 600# RFLWN **	P.G.	
PG2	2	1 1/2" 600# RFLWN **	P.G.	

** WITH BLIND FLANGE, BOLTING AND GASKETS

CERTIFIED CORRECT FOR FABRICATION

BY: GLENN HEITKAMP DATE: 11/10/06

CERTIFIED AS-BUILT
D. DiCarlo 4/24/07

NO.	DATE	REVISIONS
2	12/5/06	REV. PER CUSTOMER COMMENTS Dan
1	10/19/06	REV. PER CUST. & E.E.C. Dan/DD

SERIAL No.: X-7262 A
CUSTOMER: D-COK / GIANT INDUSTRIES
P.O. NO.: 56603-P-12-04
ITEM NO.: E-641 A
SERVICE: REACTOR FEED / EFFLUENT EXCHANGER
SHIP TO: GRAFTON, VA

ASSEMBLY AND SPECIFICATIONS FOR
ONE 59-264 A F U

DWN. BY Dan
DATE 9/5/06
CKD. BY GH/DD

Energy Exchanger Co.
1844 No. Garnett Rd. • Tulsa, Okla.74116

DWG. NO. X-7262-A1
REV. 2

#105751

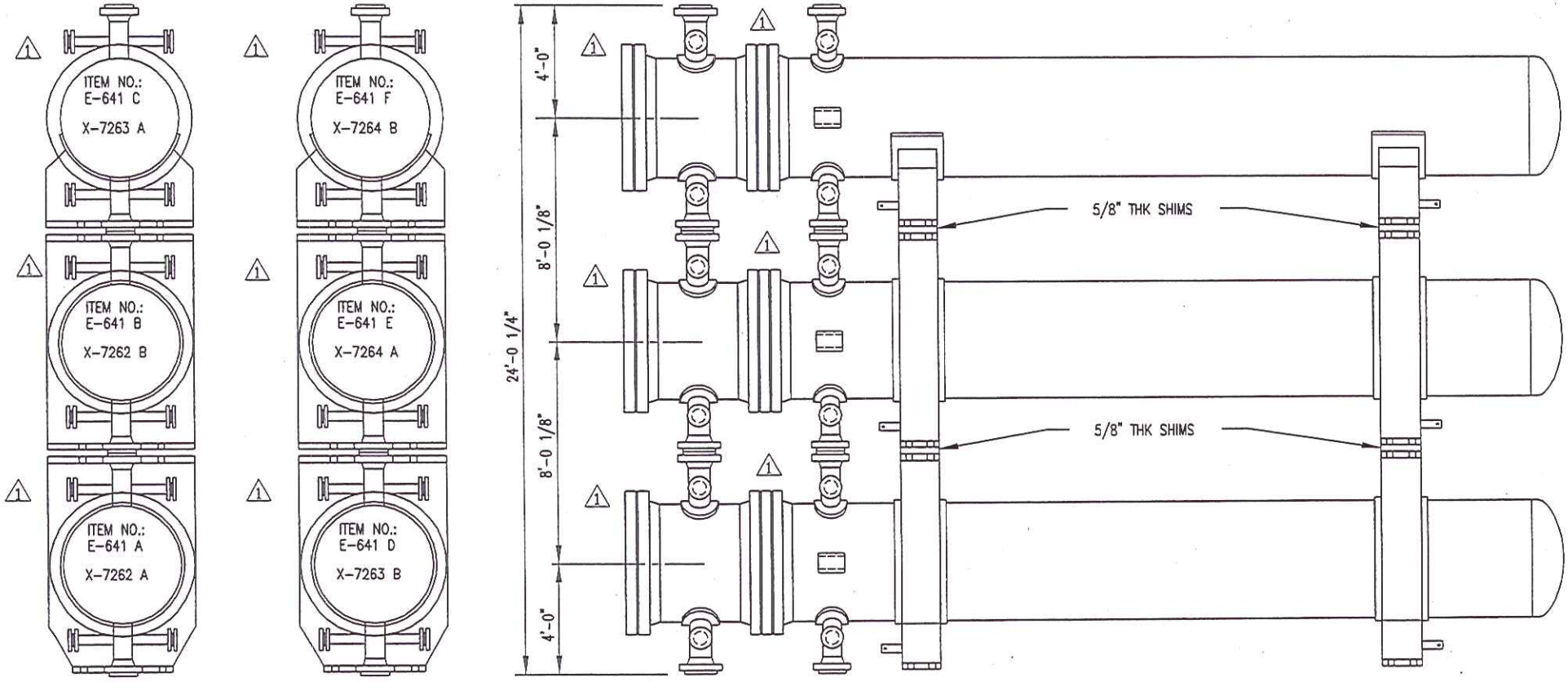

CERTIFIED AS-BUILT
D. D. Carlo 4/24/07

NOTES:

1) SHIM, GASKETS AND BOLTS FOR STACKING SHALL BE FURNISHED BY ENERGY.
2) HYDROTEST IN THE STACKED POSITION.

SERIAL NO.: X-7262-A/B
CUSTOMER: D-COK / GIANT INDUSTRIES
P. O. NO.: 56603-P-12-04
ITEM NO.: E-641 A/B/C/D/E/F
SERVICE: REACTOR FEED/EFFLUENT EXCHANGER
SHIP TO: GRAFTON, VA

Shaw Stone & Webster, Inc.

PROJECT TITLE: GIANT S ZORB
JOB No.: 120653
SSW: 120653-P-12-04 (T110-01)
ISSUE:
EQUIPMENT No.: 56603-P-12-04 (T110-01)

- ☐ FOR INFORMATION
- ☐ ACCEPTED
- ☐ ACCEPTED AS NOTED
- ☐ ACCEPTED FOR CIVIL AND PIPING IFC
- ☐ ACCEPTED AS CERTIFIED
- ☐ REVISE AND RESUBMIT

SIGNED:
DATE:

THE ACCEPTANCE OF THIS DATA BY SHAW STONE & WEBSTER DOES NOT RELIEVE THE CONTRACTOR OR SUPPLIER FROM THE OBLIGATIONS IMPOSED BY THE PURCHASER ORDER OR CONTRACT.

NO.	DATE	REVISIONS
2	12/6/06	REV. PER CUSTOMER COMMENTS Dan/DD
1	10/19/06	REV. PER CUSTOMER COMMENTS Dan/DD

STACKING ARRANGEMENT

DWN. BY: Dan
DATE: 10/19/06
CKD. BY: GH

Energy Exchanger Co.
1844 No. Garnett Rd. • Tulsa, Okla. 74116

DWG. NO.: X-7262-A3
REV.: 2

105731

COVER NOTES:
1) MACHINE ALL COVER SURFACES TO 250 AARH, EXCEPT GASKET SURFACES MACHINE TO 125 AARH.
2) ALL COVER PASS PLATE GROOVE WIDTH SHALL BE 1/2".
3) ALL COVER PASS PLATE GROOVE JUNCTIONS SHALL BE NOTCHED 3/8" @ 45°.

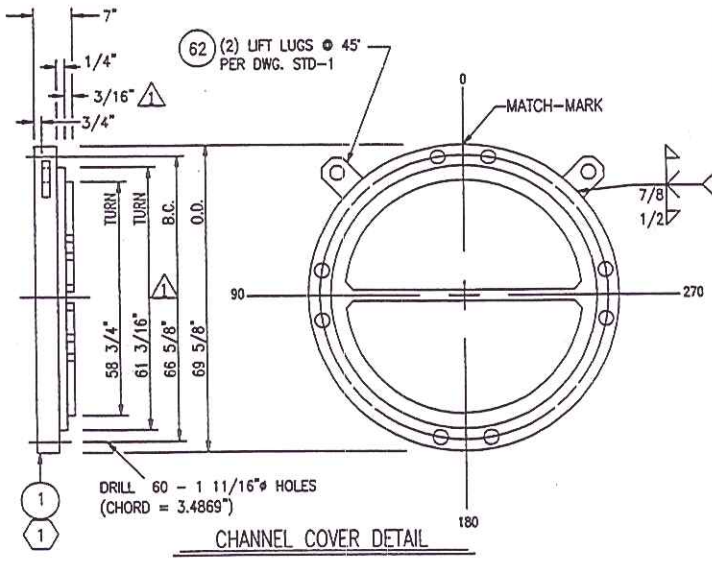

CHANNEL COVER DETAIL

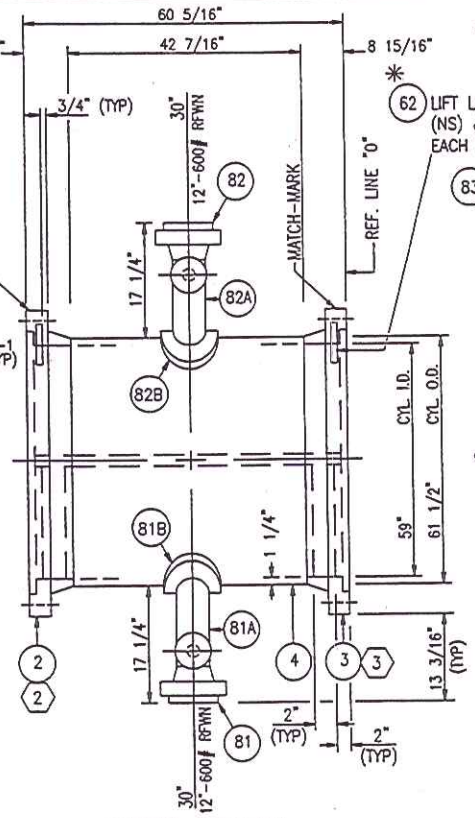

CHANNEL SIDE VIEW

* MACHINE GASKET FACING AFTER ALL WELDING.

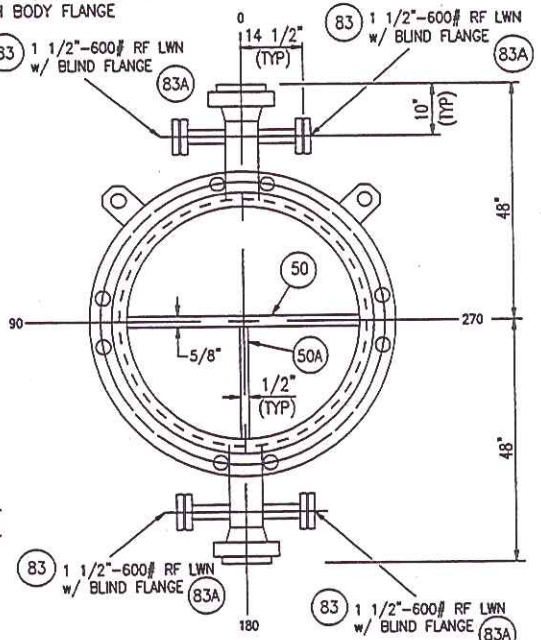

CHANNEL END VIEW

SERIAL NO.: X-7262-A/B
CUSTOMER: D-COK / GIANT INDUSTRIES
P. O. NO.: 56603-P-12-04
ITEM NO.: E-641 A/B
SERVICE: REACTOR FEED/EFFLUENT EXCHANGER
SHIP TO: GRAFTON, VA

CERTIFIED AS-BUILT
D. DiCarlo 4/24/07

NOTES:
1) FOR WELD & BEVEL DETAILS, SEE DWG STD-1.
2) FOR BODY FLANGE DETAILS, SEE DWG. X-7262-M.
3) FOR FABRICATION NOTES, SEE DWG. X-7262-N.
4) MILL PASS PLATES TO 3/8", BOTH ENDS.

REQUIRED AS SHOWN FOR ONE UNIT; TWO-UNITS REQUIRED.

NO.	DATE	REVISIONS
1	12/6/06	REV. PER E.E.C. Dan

CHANNEL DETAILS

DWN. BY: Dan
DATE: 10/19/06
CKD. BY: DiCarlo
DWG. NO.: X-7262-B
REV.: 1

Energy Exchanger Co.
1844 No. Garnett Rd. • Tulsa, Okla.74116

Shaw Stone & Webster, Inc.
PROJECT TITLE: GIANT S ZORB
JOB No.: 126653
SSW: 126653-P-12-04 (T110-01)
ISSUE:
EQUIPMENT No.: 56603-P-12-04 (T110-01)
☐ FOR INFORMATION ☐ ACCEPTED FOR CIVIL AND PIPING IFC
☐ ACCEPTED ☐ ACCEPTED AS CERTIFIED
☐ ACCEPTED AS NOTED ☐ REVISE AND RESUBMIT
SIGNED:
DATE:

THE ACCEPTANCE OF THIS DATA BY SHAW STONE & WEBSTER DOES NOT RELIEVE THE CONTRACTOR OR SUPPLIER FROM THE OBLIGATIONS IMPOSED BY THE PURCHASER ORDER OR CONTRACT.

#157501

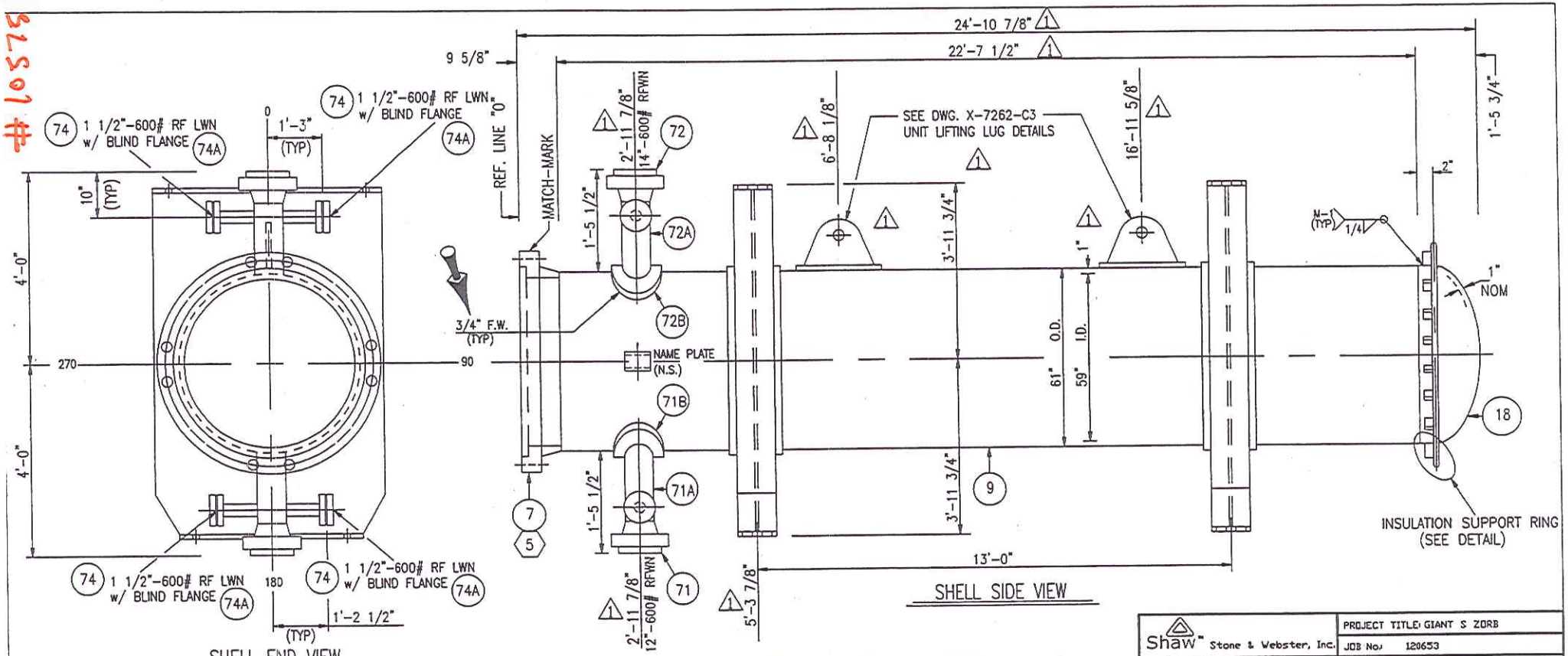

NOTES:

1) FOR WELD & BEVEL DETAILS, SEE DWG. STD-1.
2) ALL BOLT HOLES TO STRADDLE CENTERLINES.
3) FOR SUPPORT DETAILS, SEE DWG. X-7262-D1.
4) FOR BODY FLANGE DETAILS, SEE DWG. X-7262-M.
5) FOR FABRICATION NOTES, SEE DWG. X-7262-N.

REQUIRED AS SHOWN FOR ONE UNIT; ONE-UNITS REQUIRED.

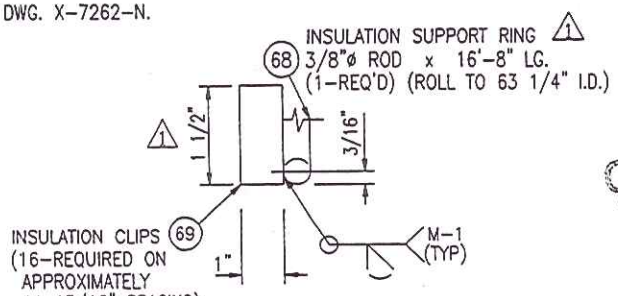

SERIAL NO.: X-7262-A
CUSTOMER: D-COK / GIANT INDUSTRIES
P. O. NO.: 56603-P-12-04
ITEM NO.: E-641 A
SERVICE: REACTOR FEED/EFFLUENT EXCHANGER
SHIP TO: GRAFTON, VA

CERTIFIED AS-BUILT
D. DiCARLO 4/24/07

NO.	DATE	REVISIONS
1	12/21/06	REV. PER CUSTOMER COMMENTS Dan

Shaw Stone & Webster, Inc.

PROJECT TITLE: GIANT S ZORB
JOB No.: 120653
SSW: 120653-P-12-04 (T110-01)
ISSUE:
EQUIPMENT No.: 56603-P-12-04 (T110-01)

- [ ] FOR INFORMATION
- [ ] ACCEPTED
- [ ] ACCEPTED AS NOTED
- [ ] ACCEPTED FOR CIVIL AND PIPING IFC
- [ ] ACCEPTED AS CERTIFIED
- [ ] REVISE AND RESUBMIT

SIGNED:
DATE:

THE ACCEPTANCE OF THIS DATA BY SHAW STONE & WEBSTER DOES NOT RELIEVE THE CONTRACTOR OR SUPPLIER FROM THE OBLIGATIONS IMPOSED BY THE PURCHASER ORDER OR CONTRACT.

SHELL DETAILS

DWN. BY: Dan
DATE: 10/19/06
CKD. BY: DiCarlo
DWG. NO.: X-7262-C1
REV.: 1

Energy Exchanger Co.
1844 No. Garnett Rd. • Tulsa, Okla.74116

LAYOUT FOR (60) TOTAL HOLES; EVERY FOURTH HOLE SHALL BE DRILLED THRU & TAPPED FOR (15)-1 1/2"ø (8-THD) STUDS (COUNTERBORE PER DETAIL "A"). ALL REMAINING HOLES SHALL BE DRILLED 1 11/16"ø. ALL HOLES SHALL STR. CENTERLINES. (CHORD = 3.4869")

DRILL 1 1/2" DP. & BOTTOM TAP FOR (1) -1"ø (8-THD) EYE-BOLT (PLUG w/ STIFF GREASE)

DRILL & TAP 3/4" DEEP FOR (20) -1/2"ø TIE RODS ON SHELL SIDE OF # 4 TUBESHEET.
DO NOT DRILL THRU !!
(SEE TUBE LAYOUT FOR LOCATIONS)

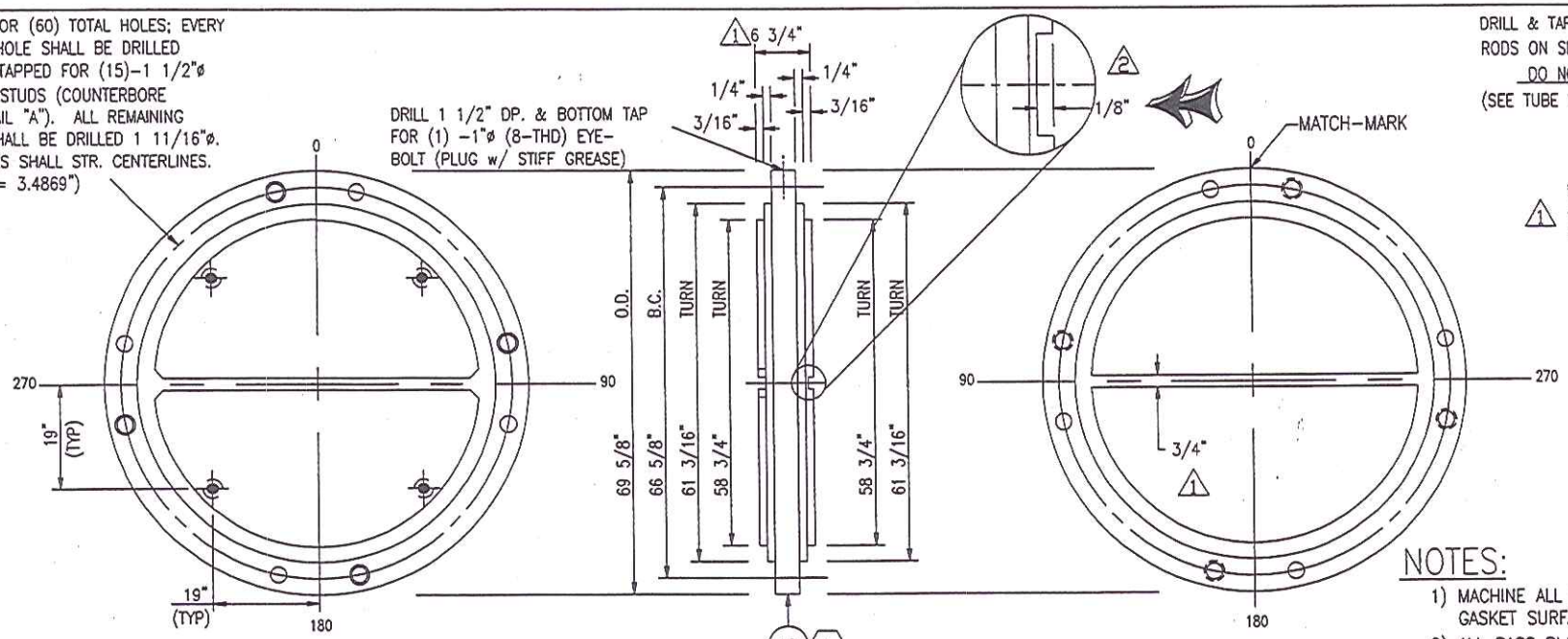

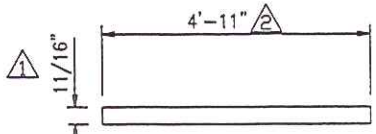

65 1/16" THK. NON-ASBESTOS SERVICE SHEET GASKET

NOTE:
THIS GASKET SHALL BE INSERTED INTO TUBESHEET GROOVE BEFORE INSTALLING LONGITUDINAL BAFFLE.

DRILL 1 1/2" DEEP & BOTTOM TAP FOR (4) -1"ø (8 THD) PULL BOLTS ON TUBE SIDE ONLY. DO NOT DRILL THRU PLUG 63

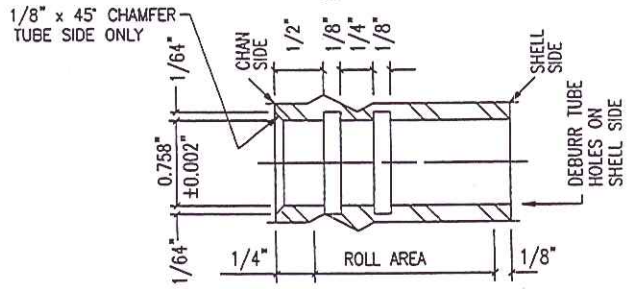

TUBE HOLE GROOVING DETAIL

REQUIRED AS SHOWN FOR ONE UNIT; TWO-UNITS REQUIRED.

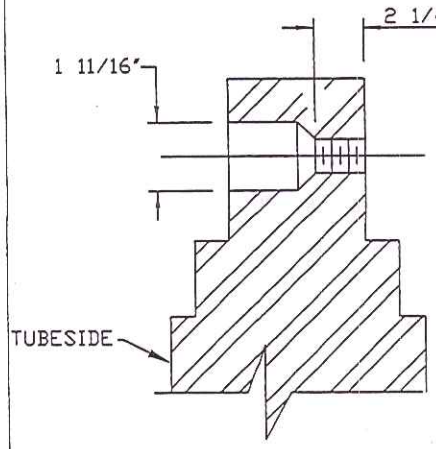

DETAIL "A"

NOTES:

1) MACHINE ALL SURFACES TO 250 AARH, EXCEPT GASKET SURFACES SHALL BE 125 AARH.
2) ALL PASS PLATE GROOVES SHALL BE 1/2" WIDE.
3) ALL PASS PLATE GROOVE JUNCTIONS SHALL TO BE NOTCHED 3/8" AT 45°.
4) TUBESHEET GASKET SURFACES SHALL HAVE A FLATNESS TOLERANCE OF ± 1/32". (AFTER TUBE WELDING & ROLLING).
5) STRENGTH WELD TUBE TO TUBESHEET. REMOVE OIL AND GREASE OR OTHER FOREIGN MATTER FROM TUBESHEET, TUBEHOLES AND TUBE ENDS PRIOR TO WELDING OF TUBES. HELI-ARC WITH FILLER METAL. WELD EACH TUBE INDIVIDUALLY WITH TWO (2) OR MORE PASSES. WPS = SW-1 DYE CHECK TUBE-TO-TUBESHEET WELDS BEFORE AND AFTER TUBE ROLLING. TEST TUBE-TO-TUBESHEET WELDS WITH 25 PSIG AIR PRESSURE AND SOAP SOLUTION, PRIOR TO FINAL TUBE ROLLING.

SERIAL NO.: X-7262-A/B
CUSTOMER: D-COK / GIANT INDUSTRIES
P. O. NO.: 56603-P-12-04
ITEM NO.: E-641 A/B
SERVICE: REACTOR FEED/EFFLUENT EXCHANGER
SHIP TO: GRAFTON, VA

Shaw Stone & Webster, Inc.
PROJECT TITLE: GIANT S ZORB
JOB No.: 120653
SSW: 120653-P-12-04 (T110-01) ISSUE:
EQUIPMENT No.: 56603-P-12-04 (T110-01)

- [ ] FOR INFORMATION
- [ ] ACCEPTED
- [ ] ACCEPTED AS NOTED
- [ ] ACCEPTED FOR CIVIL AND PIPING IFC
- [ ] ACCEPTED AS CERTIFIED
- [ ] REVISE AND RESUBMIT

SIGNED:
DATE:

THE ACCEPTANCE OF THIS DATA BY SHAW STONE & WEBSTER DOES NOT RELIEVE THE CONTRACTOR OR SUPPLIER FROM THE OBLIGATIONS IMPOSED BY THE PURCHASER ORDER OR CONTRACT.

CERTIFIED AS-BUILT
D. DiCarlo 4/24/07

NO.	DATE	REVISIONS
2	2/14/07	REV. PER E.E.C. DGD
1	12/6/06	REV. PER E.E.C. & CUST. Dan/DD

TUBESHEET DETAILS

DWN. BY: Dan
DATE: 10/19/06
CKD. BY: DiCarlo

Energy Exchanger Co.
1844 No. Garnett Rd. • Tulsa, Okla.74116

DWG. NO.: X-7262-E
REV.: 2

#105751

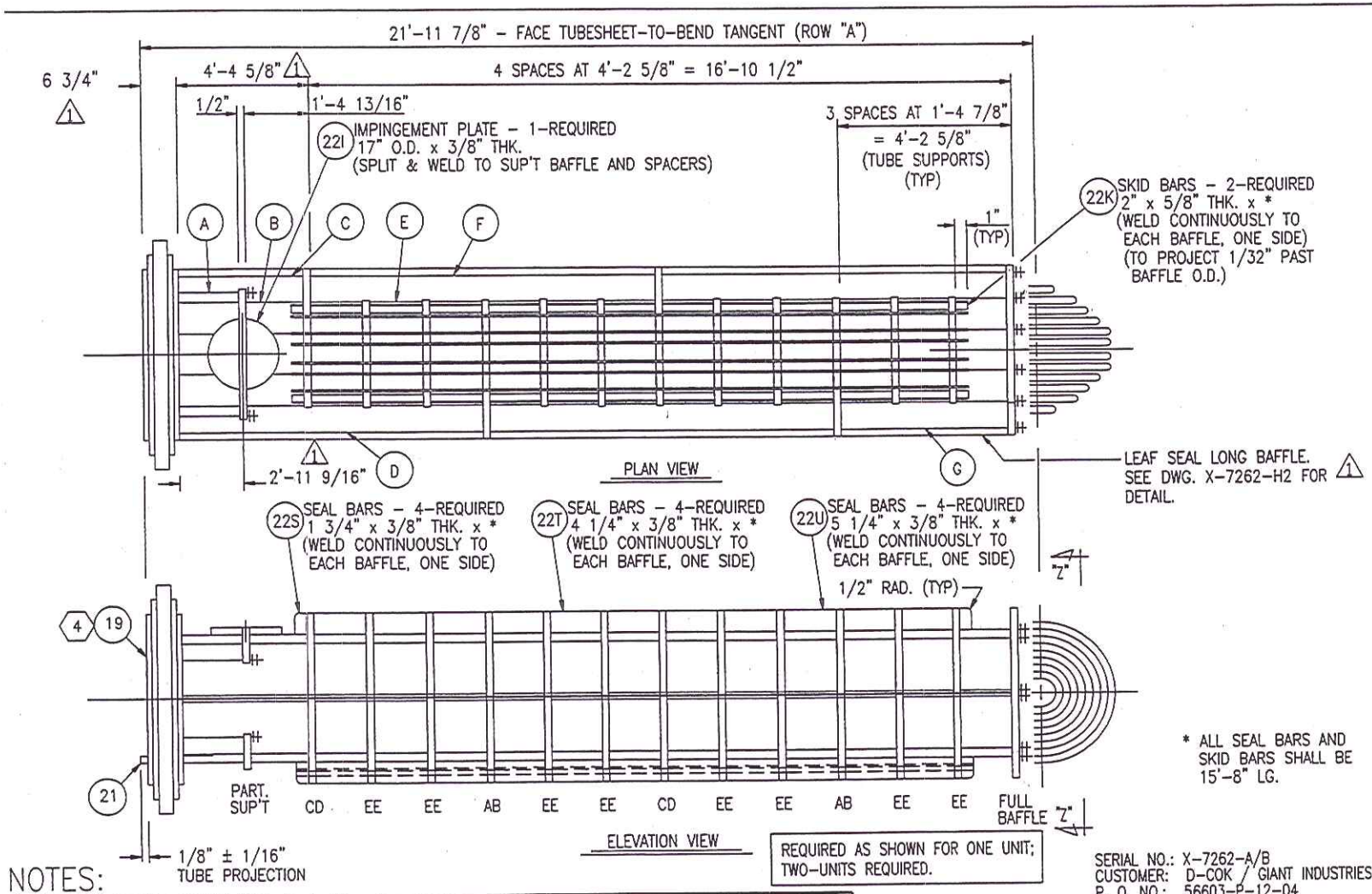

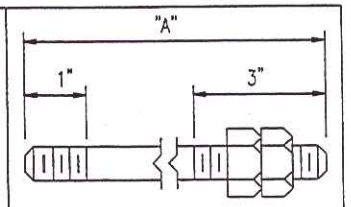

1/2" O.D. TIE RODS (23)

REQ'D	"A"
4	3'-2 3/8"
16	21'-5 1/2"

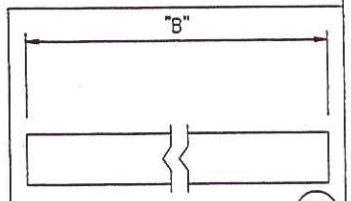

(23A)

1/2"-Sch. 40 SMLS. PIPE SPACERS

	REQ'D	"B"
1	(A) 12	35 5/16"
	(B) 8	16 7/16"
1	(C) 6	52 1/4"
1	(D) 2	102 7/8"
	(E) 144	16 1/2"
	(F) 6	100 7/8"
	(G) 2	50 1/4"

* ALL SEAL BARS AND SKID BARS SHALL BE 15'-8" LG.

REQUIRED AS SHOWN FOR ONE UNIT; TWO-UNITS REQUIRED.

SERIAL NO.: X-7262-A/B
CUSTOMER: D-COK / GIANT INDUSTRIES
P. O. NO.: 56603-P-12-04
ITEM NO.: E-641 A/B
SERVICE: REACTOR FEED/EFFLUENT EXCHANGER
SHIP TO: GRAFTON, VA

NOTES:

1) FOR VIEW DETAILS, SEE X-7262-J1 & J2.
2) STRENGTH WELD TUBE TO TUBESHEET. REMOVE OIL AND GREASE OR OTHER FOREIGN MATTER FROM TUBESHEET, TUBE-HOLES & TUBE ENDS PRIOR TO WELDING OF TUBES. HELI-ARC WITH FILLER METAL. WELD EACH TUBE INDIVIDUALLY WITH TWO (2) OR MORE PASSES. WPS = SW-1. DYE CHECK TUBE-TO-TUBESHEET WELDS BEFORE AND AFTER TUBE ROLLING. TEST TUBE-TO-TUBESHEET WELDS WITH 25 PSIG AIR PRESSURE AND SOAP SOLUTION, PRIOR TO FINAL TUBE ROLLING.

Shaw Stone & Webster, Inc.
PROJECT TITLE: GIANT S ZORB
JOB No.: 120653
SSW: 120653-P-12-04 (T110-01)
ISSUE:
EQUIPMENT No.: 56603-P-12-04 (T110-01)

- ☐ FOR INFORMATION
- ☐ ACCEPTED
- ☐ ACCEPTED AS NOTED
- ☐ ACCEPTED FOR CIVIL AND PIPING IFC
- ☐ ACCEPTED AS CERTIFIED
- ☐ REVISE AND RESUBMIT

SIGNED:
DATE:

THE ACCEPTANCE OF THIS DATA BY SHAW STONE & WEBSTER DOES NOT RELIEVE THE CONTRACTOR OR SUPPLIER FROM THE OBLIGATIONS IMPOSED BY THE PURCHASER ORDER OR CONTRACT.

NO.	DATE	REVISIONS
1	12/6/06	REV. PER CUST. COMMENTS Dan

CERTIFIED AS BUILT
D. DiCarlo 4/24/07

BUNDLE DETAILS

DWN. BY: Dan
DATE: 10/23/06
CKD. BY: DiCarlo

Energy Exchanger Co.
1544 No. Garnett Rd. • Tulsa, Okla. 74116

DWG. NO.: X-7262-H1
REV.: 1

#105751

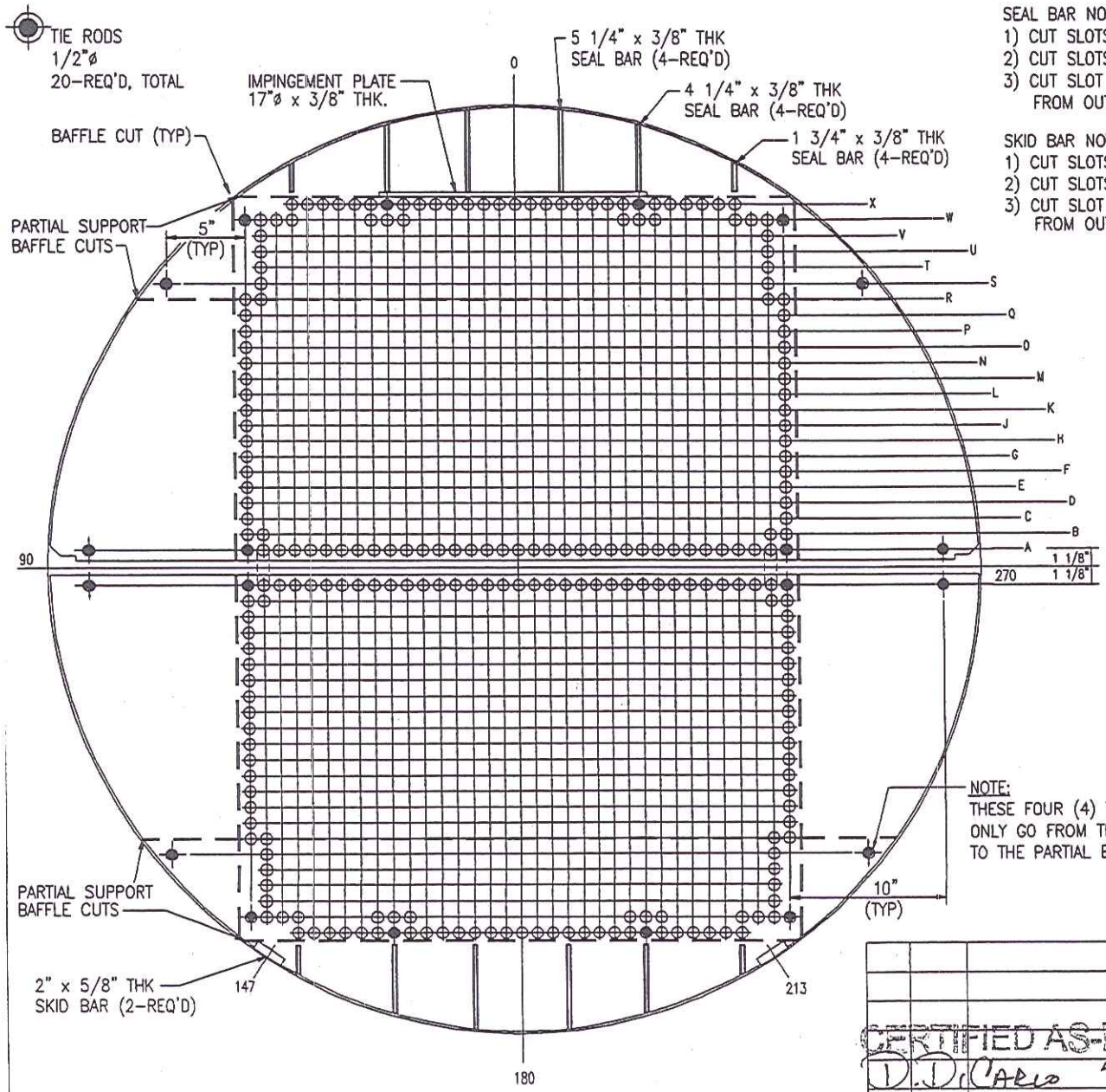

VIEW LOOKING AT SHELL SIDE OF NO. 4 TUBESHEET

NOTE:
THESE FOUR (4) TIE RODS SHALL ONLY GO FROM THE TUBESHEET TO THE PARTIAL BAFFLES.

SEAL BAR NOTES:
1) CUT SLOTS IN BAFFLES ONLY.
2) CUT SLOTS 7/16" WIDE.
3) CUT SLOT DEPTHS [SEAL BAR WIDTH + 1/16"] FROM OUTSIDE EDGE OF SLOT.

SKID BAR NOTES:
1) CUT SLOTS IN BAFFLES ONLY.
2) CUT SLOTS 2 1/16" WIDE.
3) CUT SLOT DEPTHS [SKID BAR THK. + 1/16"] FROM OUTSIDE EDGE OF SLOT.

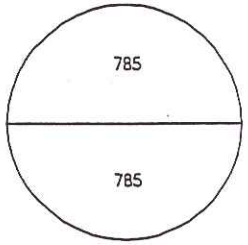

TUBE DISTRIBUTION

NOTES:
1) DRILL AND REAM TUBE HOLES IN TUBESHEET TO 0.758" ± 0.002" DIAMETER, FOR 785 – 3/4" O.D. U-TUBES. TOTAL HOLES = 1570.
2) TUBE PITCH = 1" SQUARE.
3) NUMBER OF PASSES = 2.
4) SEE DRAWING X-7262-E FOR TUBE GROOVING DETAILS.
5) BAFFLE O.D. = 58 11/16".
6) O.T.L. = 55 3/8".

SERIAL NO.: X-7262 A/B
CUSTOMER: D-COK / GIANT INDUSTRIES
P. O. NO.: 56603-P-12-04
ITEM NO.: E-641 A/B
SERVICE: REACTOR FEED/EFFLUENT EXCHANGER
SHIP TO: GRAFTON, VA

Shaw Stone & Webster, Inc.
PROJECT TITLE: GIANT S ZORB
JOB No: 120653
SSW: 120653-P-12-04 (T110-01)
ISSUE:
EQUIPMENT No.: 56603-P-12-04 (T110-01)

- [ ] FOR INFORMATION
- [ ] ACCEPTED
- [ ] ACCEPTED AS NOTED
- [ ] ACCEPTED FOR CIVIL AND PIPING IFC
- [ ] ACCEPTED AS CERTIFIED
- [ ] REVISE AND RESUBMIT

SIGNED:
DATE:

THE ACCEPTANCE OF THIS DATA BY SHAW STONE & WEBSTER DOES NOT RELIEVE THE CONTRACTOR OR SUPPLIER FROM THE OBLIGATIONS IMPOSED BY THE PURCHASER ORDER OR CONTRACT.

NO.	DATE	REVISIONS

CERTIFIED AS-BUILT
D. DiCarlo 4/24/07

TUBE LAYOUT

DWN. BY: Don
DATE: 10/10/06
CKD. BY: DiCarlo
DWG. NO.: X-7262-F
REV.: 0

Energy Exchanger Co.
1844 No. Garnett Rd. • Tulsa, Okla.74116

#105751

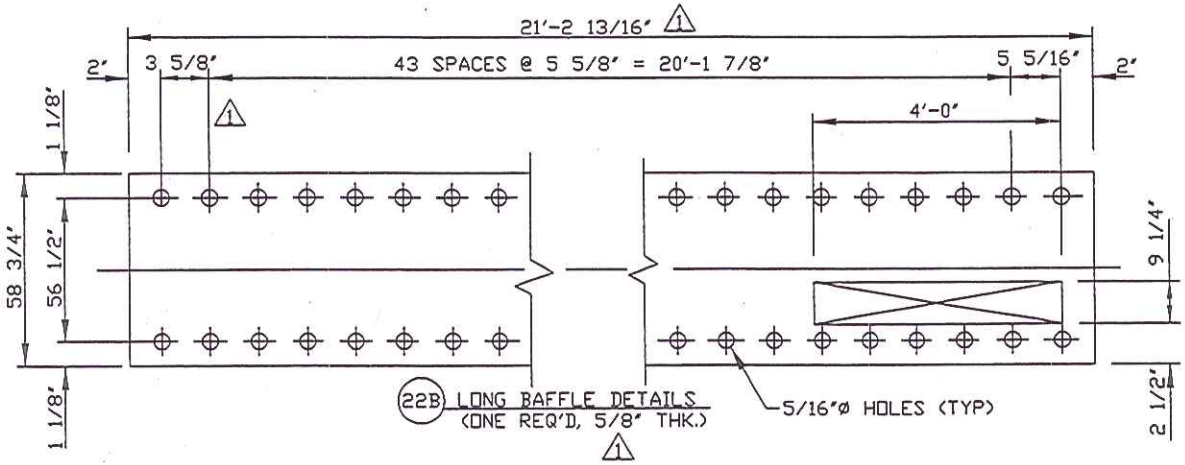

22B LONG BAFFLE DETAILS
(ONE REQ'D, 5/8" THK.)
1

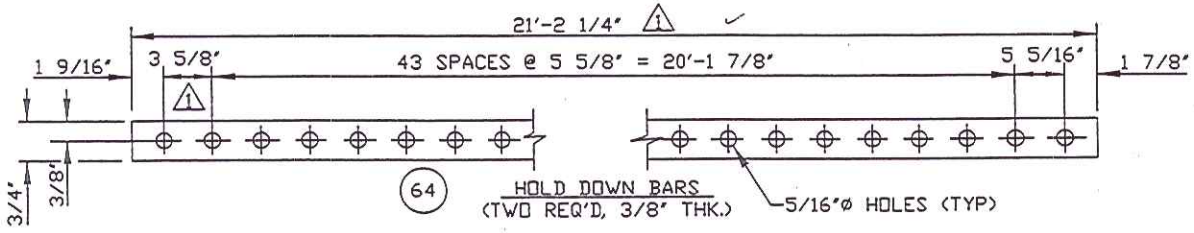

64 HOLD DOWN BARS
(TWO REQ'D, 3/8" THK.)

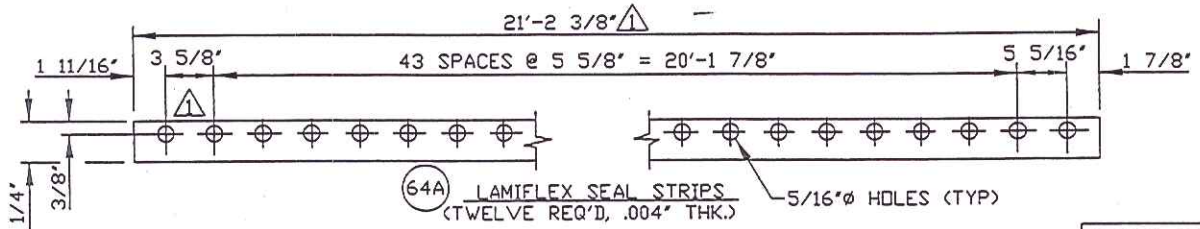

64A LAMIFLEX SEAL STRIPS
(TWELVE REQ'D, .004" THK.)

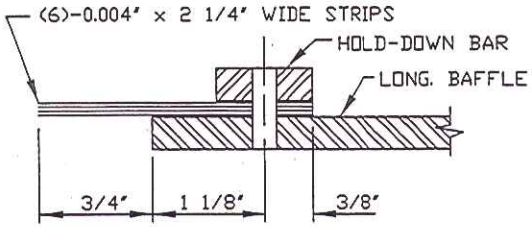

NOTE:
SEAL STRIPS, BOLTS & HOLD-DOWN BARS SHALL BE ASSEMBLED TO THE LONG. BAFFLE AFTER BOTTOM HALF OF BUNDLE HAS BEEN TUBED.

ASSEMBLY DETAIL

CERTIFIED AS-BUILT
D. DiCarlo 4/24/07

REQUIRED AS SHOWN FOR ONE UNIT; TWO-UNITS REQUIRED.

SERIAL NO.: X-7262-A/B
CUSTOMER: D-COK / GIANT INDUSTRIES
P. O. NO.: 56603-P-12-04
ITEM NO.: E-641 A/B
SERVICE: REACTOR FEED/EFFLUENT EXCHANGER
SHIP TO: GRAFTON, VA

Shaw Stone & Webster, Inc.

PROJECT TITLE: GIANT S ZDRB
JOB No.: 120653
SSW: 120653-P-12-04 (T110-01)
ISSUE:
EQUIPMENT No.: 56603-P-12-04 (T110-01)

- [ ] FOR INFORMATION
- [ ] ACCEPTED
- [ ] ACCEPTED AS NOTED
- [ ] ACCEPTED FOR CIVIL AND PIPING IFC
- [ ] ACCEPTED AS CERTIFIED
- [ ] REVISE AND RESUBMIT

SIGNED:
DATE:

THE ACCEPTANCE OF THIS DATA BY SHAW STONE & WEBSTER DOES NOT RELIEVE THE CONTRACTOR OR SUPPLIER FROM THE OBLIGATIONS IMPOSED BY THE PURCHASER ORDER OR CONTRACT.

NO.	DATE	REVISIONS
1	12/6/06	REV. PER E.E.C. & CUST. Dan/

LONGITUDINAL BAFFLE DETAILS

DWN. BY: Dan
DATE: 10/23/06
CKD. BY: DiCarlo

Energy Exchanger Co.
1344 No. Garnett Rd. • Tulsa, Okla.74116

DWG. NO.: X-7262-H2
REV.: 1

#105751

NB

CERTIFIED BY

Energy Exchanger Company

TULSA, OKLAHOMA

U

W

RT-1

MAWP SHELL	497 *	P.S.I. @	500 *	°F	729	TEST P.S.I.G.
MAWP TUBE	625 *	P.S.I. @	500 *	°F	813	TEST P.S.I.G.
MIN. DESIGN METAL TEMP.	SHELL	0	°F @	497 *	P.S.I.	
	TUBE	0	°F @	625 *	P.S.I.	

SERIAL NO. (1) YEAR BUILT 2007

P.O. NO. 56603-P-12-04

SERVICE REACTOR FEED/EFFLUENT EXCHANGER

ITEM (2) SIZE 59-264 TYPE AFU

* MAX. ALLOW. EXT. PRESS. = 15 PSIG @ 366°F.

FIELD TEST PRESS. : SHELL = 647 PSIG ; TUBE = 813 PSIG

NAME PLATE DETAIL

2-REQUIRED

NOTE

CLIP CORNERS AND SEAL WELD NAMEPLATE TO BRACKET.

SHOP TO ASSIGN AT COMPLETION OF FABRICATION

(60)

(61)

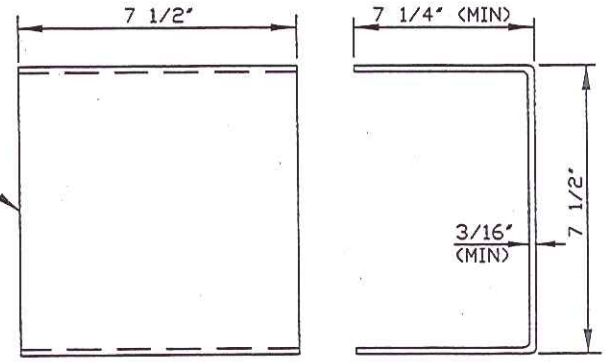

NAME PLATE BRACKET DETAIL

2-REQUIRED

(1) X-7262 A, X-7262 B

(2) E-641 A, E-641 B

SERIAL NO.: X-7262-A/B
CUSTOMER: D-COK / GIANT INDUSTRIES
P. O. NO.: 56603-P-12-04
ITEM NO.: E-641 A/B
SERVICE: REACTOR FEED/EFFLUENT EXCHANGER
SHIP TO: GRAFTON, VA

Shaw Stone & Webster, Inc.

PROJECT TITLE: GIANT S ZORB

JOB No.: 120653

SSW: 120653-P-12-04 (T110-01) ISSUE:

EQUIPMENT No.: 56603-P-12-04 (T110-01)

- [ ] FOR INFORMATION
- [ ] ACCEPTED
- [ ] ACCEPTED AS NOTED
- [ ] ACCEPTED FOR CIVIL AND PIPING IFC
- [ ] ACCEPTED AS CERTIFIED
- [ ] REVISE AND RESUBMIT

SIGNED:

DATE:

THE ACCEPTANCE OF THIS DATA BY SHAW STONE & WEBSTER DOES NOT RELIEVE THE CONTRACTOR OR SUPPLIER FROM THE OBLIGATIONS IMPOSED BY THE PURCHASER ORDER OR CONTRACT.

NO.	DATE	REVISIONS
1	12/6/06	REV. PER E.E.C. Dan/

CERTIFIED AS-BUILT
D.DiCarlo 4/24/07

NAME PLATE DETAILS

DWN. BY Dan

DATE 10/23/06

CKD. BY DiCarlo

Energy Exchanger Co.
1844 No. Garnett Rd. • Tulsa, Okla.74116

DWG. NO. X-7262-L

REV. 1

#105751