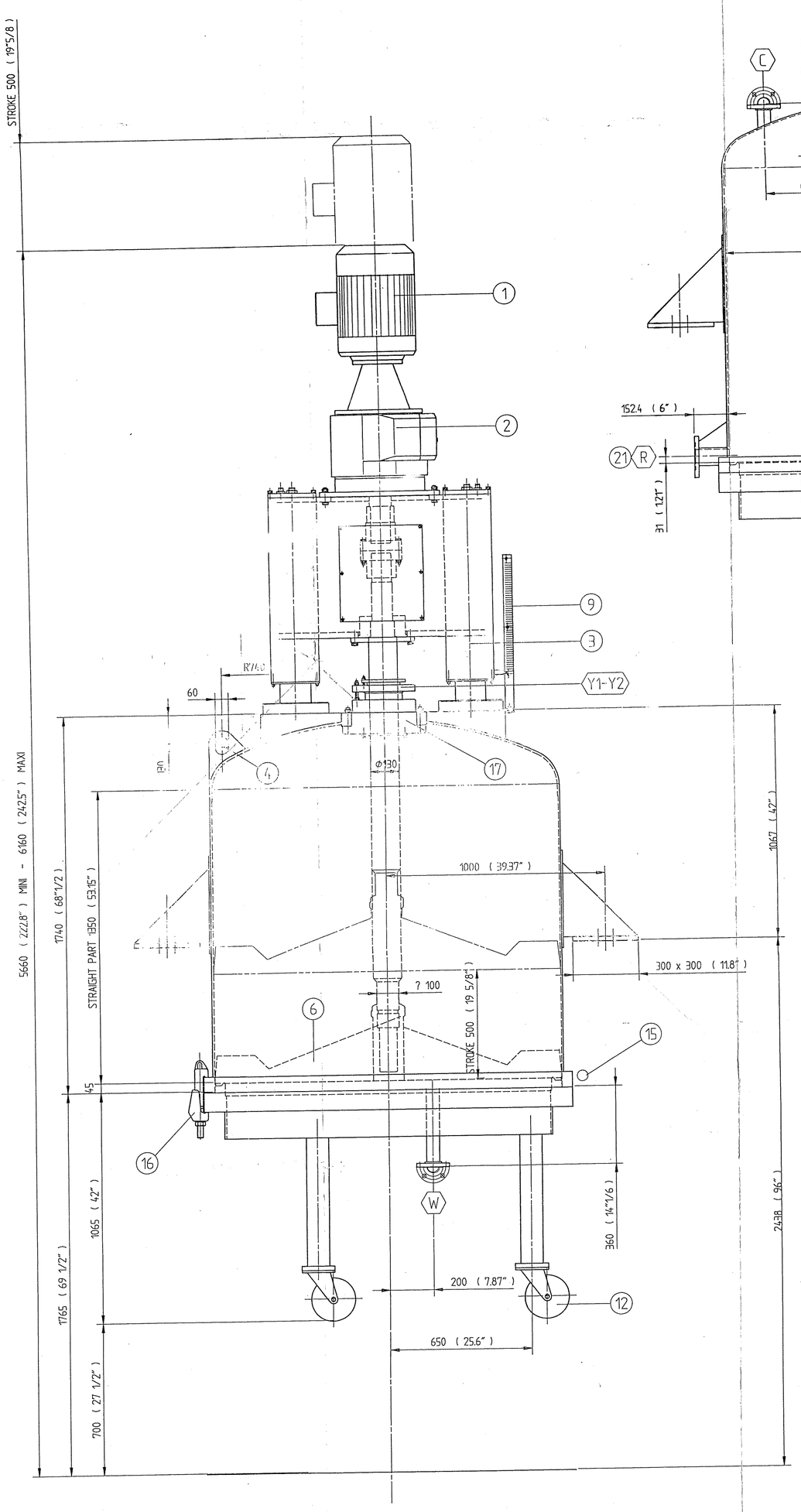

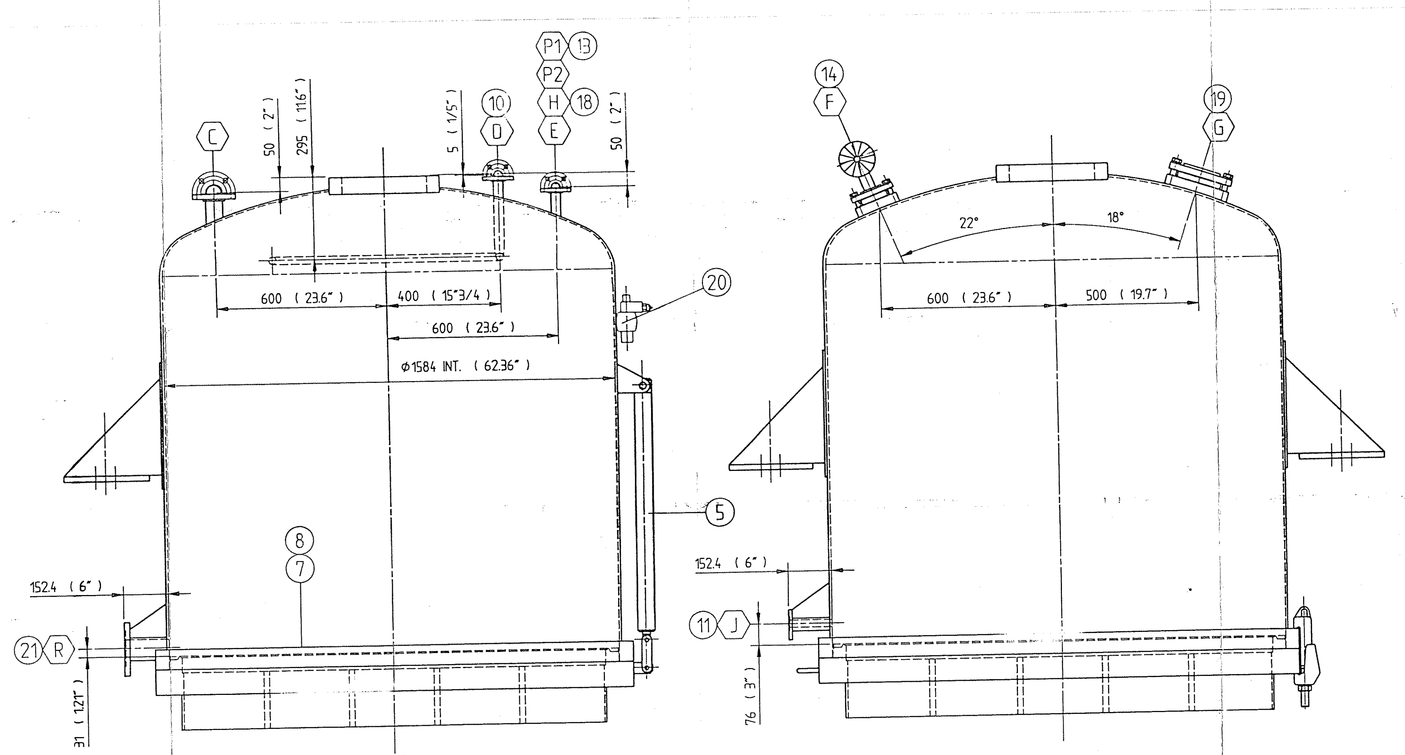

DRIVE UNIT NOT SHOWN FOR CLARITY

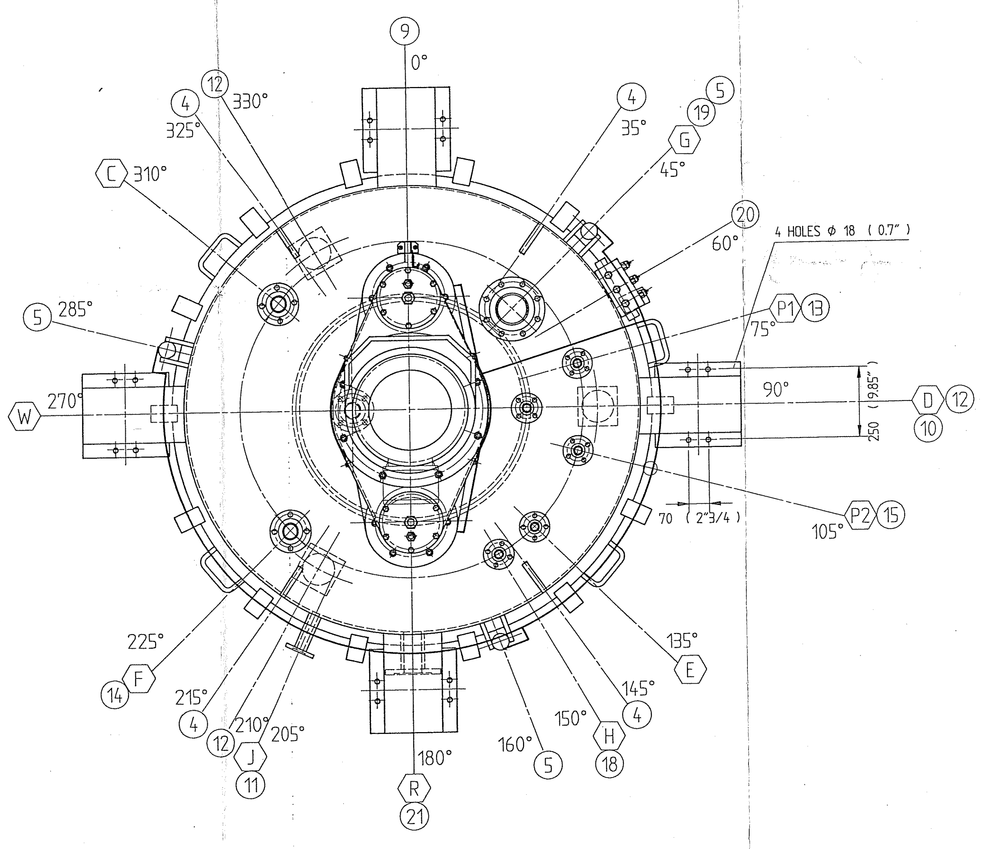

NOZZLE SCHEDULE

A	*	*	*
B	*	*	*
C	2"	SLURRY INLET	# 150 RFSO
D	1"	SOLVENT SPRAY RING	# 150 RFSO
E	1"	VENT	# 150 RFSO
F	2"	LIGHT CONNECTION	# 150 PAD
G	1"	SIGHT GLASS	# 150 PAD
H	1"	SAFETY RELIEF	# 150 RFSO
J	1"	SAMPLE TYPE (SUITABLE FOR STRAHMANN 1" 60°)	# 150 PAD
K	*	*	*
L	*	*	*
M	*	*	*
N	*	*	*
P1	1"	PRESSURE GAUGE (GAUGE BY CLIENT)	# 150 RFSO
P2	1"	GAS PURGE (NITROGEN INLET)	# 150 RFSO
R	3"	SLURRY OUTLET (SUITABLE FOR STRAHMANN 3" 60°)	# 150 PAD
Y1-Y2	1/2" NPT	STUFFING BOX NITROGEN INLET	*
T	*	*	*
U	*	*	*
V	*	*	*
W	2"	FILTRATE OUTLET	# 150 RFSO
X	*	*	*
Z	*	*	*
*	*	*	*
*	*	*	*
*	*	*	*

ACCESSORIES

REPERE MARK	
1	EX PROOF ELECTRIC MOTOR 20HP, 460 V, 1800 RPM, C-FACE 256T THROUGH FREQUENCY
	INVERTER DRIVEN 10 - 60 Hz " RELIANCE " (BY ROSENMUND INC.)
2	GEARBOX TYPE PF193. I : 50.62 • ADAPTATOR LP284/286 " SEW "
3	2 HYDRAULIC CYLINDERS Φ63/36 STROKE: 500 mm, COLUMNS Φ140 "ARDEN VERINS"
4	4 LIFTING LUGS
5	3 HYDRAULIC CYLINDERS Φ40/28 STROKE 720 MM "ARDEN VERINS"
6	AGITATOR (6 - 36 RPM)
7	316L DRAINING MESH WIRE 0.7 / 2.0 x 2.0 MM
8	SINGLE LAYER CLOTH (BY CLIENT)
9	GRADUATED SCALE 500 MM
10	WASHING RING WITH 16 SPRAY-NOZZLES 316L TYPE BM 20 " SODERCO "
	(FLOW: 145 LITERS/MN AT 50 Psi)
11	1" STRAHMAN VALVE (BY ROSENMUND INC)
12	3 CASTOR WHEELS NYLON 6 - TYPE LKX-SPO 200G " BUCKLE "
13	PRESSURE GAUGE (BY CLIENT)
14	VESSEL LIGHT TYPE HYLBO-100H-EXP " CANTY " (BY ROSENMUND INC.)
15	PROXIMITY SENSOR TYPE NJ4-12 GH-N " PEPPERLS & FUCHS " (BY ROSENMUND INC.)
16	14 CLAMPS M27A x 160 (BICHROMATED)
17	DOUBLE STUFFING BOX WITH PTFE PACKING AND NITROGEN FLUSH
18	SAFETY VALVE (BY CLIENT)
19	4" SIGHT GLASS F.M. APPROVED " CANTY "
20	SELF REGULATING SPEED GOVERNOR • ALL HYDRAULIC CONNECTIONS.
21	3" STRAHMAN VALVE (BY ROSENMUND INC.)
22	*
29	*

SPECIFICATIONS TECHNIQUES – TECHNICAL SPECIFICATIONS

DONNEES DE CALCUL – DESIGN DATA

CODE : ASME VIII Div1, Ed.95, Add.95			CORPS / VESSEL
PRESSION PRESSURE	SERVICE	- WORKING	FULL VACUUM / 50 Psig (VIDE / 0.35 MPa)
	CALCUL	- DESIGN	FULL VACUUM / 50 Psig (VIDE / 0.35 MPa)
	EPREUVE TEST	HYDRAULIQUE - HYDRAULIC	76 Psig (0.52 MPa)
		PNEUMATIQUE - PNEUMATIC	NO
		SOUS VIDE - VACUUM	YES
	SOUMIS AU MMES	- FRENCH REGULATION	NO
TEMPERATURE	SERVICE	- WORKING	32°F / 212°F (0°C / 100°C)
	CALCUL	- DESIGN (MAWP)	212°F (100°C)
	MIN	- (MDMT AT MAWP)	32°F (0°C)
CAPACITE		- CAPACITY	3050 LITERS
FLUIDE		- FLUID	GAS
DENSITE		- DENSITY	*
SUREPAISSEUR DE CORROSION		- CORROSION ALLOWANCE	0
COEFF DE SOUDURE	VIROLE	- SHELL	0.7
JOINT EFFICIENCY	FOND	- HEAD	0.85
RECUIT		- STRESS RELIEF	NO
RADIOGRAPHIE		- RADIOGRAPHY	NO
RESSUAGE		- PENETRANT TEST	ACCORDING TO UG-93 (ASME VIII Div.1)
RESILIENCE		- IMPACT TESTING	NONE , ACCORDING TO UHA51 AND UHA65 (ASME VIII Div.1)
*		*	*
*		*	*

POIDS – WEIGHT

POIDS A VIDE - EMPTY WEIGHT	~ 3600 KG - ~7940 Lbm
POIDS PLEIN D'EAU - WEIGHT FULL OF WATER	~ 6700 KG - ~14770 Lbm
*	*

MATERIAUX – MATERIALS

CODE: ASME II PART A, Ed.95, Add.95			
VIROLE		- SHELL	SA 240-316L
FONDS(I)		- TOP	SA 240-316L — TYPE : TORESPHERICAL
FONDS(I)		- BOTTOM	SA 240-316L — TYPE : FLAT
RENFORTS		- REINFORCEMENTS	SA 240-304L
BRIDES DE CORPS		- SHELL FLANGES	SA 182-F316L
TUBULURES CORPS	TUBES	- PIPES	SA 312-TP316L
VESSEL NOZZLE	BRIDES	- FLANGES	SA 182-F316L
DOUBLE ENVELOPPE		- JACKET	NO
DEMI COQUILLES		- HALF PIPE COILS	NO
TUBULURES D.E.	TUBES	- PIPES	NO
JACKET NOZZLES	BRIDES	- FLANGES	NO
CALORIFUGE		- INSULATION	NO
ENVELOPPE CALORIFUGE		- SHEATHING	NO
PIECES INTERNES		- INTERNAL PARTS	316L S.S.
BOULONNERIE INT		- INTERNAL BOLTING	316L S.S.
CRAMPONS		- CLAMPS	SA 193 - B7 (BICHROMATED)
BOULONNERIE CRAMPONS		- CLAMP BOLTING	SA 194 - 2H (BICHROMATED)
BOULONNERIE EXT		- EXTERNAL BOLTING	SA 193-B8T
PLAQUE D'IDENTITE		- NAME PLATE	304L
O'RINGS		- O'RINGS	VITON ENCAPSULATED IN FEP
PIEDS/CHASSIS		- VESSEL SUPPORT LUGS	PAINTED STEEL
CARTERS		- GUARDS/CASINGS	NO
SUPPORT GROUPE DE COMMANDE		- DRIVE STOOL	PAINTED STEEL
GOULOTTE DE VIDANGE		- DISCHARGE CABINET	NO
VERINS		- CYLINDERS	PAINTED STEEL
COLONNE DE GUIDAGE DU GROUPE		- COLUMNS	CHROMIUM PLATED STEEL
TUYAUTERIES HYDRAULIQUES		- HYDRAULIC PIPING	BICHROMATED PIPES AND COUPLINGS
*		*	*

FABRICATION – MANUFACTURING

CODE : ASME VIII Div1, Ed.95, Add.95	INT.	EXT.
POLISSAGE - POLISH	MILL FINISH	GLASS BEAD BLASTED
POLISSAGE DES SOUDURES BOUT A BOUT - GROOVE WELDS POLISH	NO	NO
POLISSAGE DES SOUDURES D'ANGLE - FILLET WELDS POLISH	NO	NO
ELECTROPOLISSAGE - ELECTROPOLISH	NO	NO
DECAPAGE , PASSIVATION - PICKLING , PASSIVATION	YES	YES
PEINTURE - PAINT	TWO COMPONENTS POLYURETHANE PAINT COLOR BLUE (IN SUITABLE PRIMER (STEEL PARTS ONLY)	
*	*	
*	*	

INSPECTION

CLIENT - CUSTOMER	DEGUSSA CORPORATION
AGENCE D'INSPECTION - AIA	HARTFORD STEAM BOILER
*	

DOCUMENTS A CONSULTER – DOCUMENTS TO CONSULT

GUEDU S.A. TECHNICAL DESCRIPTION N° F 20 AU 160 / REV3
ROSENMUND INC. QUOTATION N° 096-GF-2069
*

NOTE DE CALCUL – CALCULATION NOTE

N° 960055

SPECIFICATIONS PARTICULIERES – PARTICULAR SPECIFICATIONS

NO STAMP MARKING ON VESSEL BODY
"U" STAMPED VESSEL WITH NATIONAL BOARD REGISTRATION
FLANGES ANSI B16.5, "SLIP ON"
ALL ELECTRIC EQUIPMENT IS DESIGNED FOR A NON-HAZARDOUS UNCLASSIFIED AREA INSTALLATION
*
*

N° APPAREIL – MACHINE Nb. 960055

#105718

REV.	DATE	MODIFICATIONS	DESIGN MANAGER APPROVAL	QCM REVIEW
D	23.12.96	UPDATED	Ph.FOURNIER	D.LURTON
C	11.12.96	UPDATED	Ph.FOURNIER	D.LURTON
B	21.11.96	ACCORDING TO COMMENTS DATED NOV. 20th	Ph.FOURNIER	D.LURTON
A	22.10.96	EDITION ORIGINALE - ORIGINAL ISSUE	Ph.FOURNIER	D.LURTON

ECHELLE / SCALE: 1/10
DESSINE PAR / DRAWN BY: Ph.FOURNIER

GUEDU
21140 SEMUR EN AUXOIS , FRANCE
TEL: (33) 80.97.12.23 FAX: (33) 80.97.14.

ENSEMBLE: FILTER ML 2000

DESIGNATION: GENERAL ARRANGEMENT

N° 96055.00

DEGUSSA CORPORATION
P.O. BOX 606
THEODORE, AL 36590 – USA

CE PLAN EST NOTRE PROPRIETE IL NE PEUT ETRE COPIE OU COMMUNIQUE A UN TIERS SANS NOTRE AUTORISATION, ET DOIT ETRE RETOURNE SUR DEMANDE.
THIS DRAWING IS OUR PROPERTY, IT MUST NOT BE COPIED OR PASSED TO A THIRD PARTY WITHOUT OUR PERMISSION, AND MUST BE RETURNED ON REQUEST.