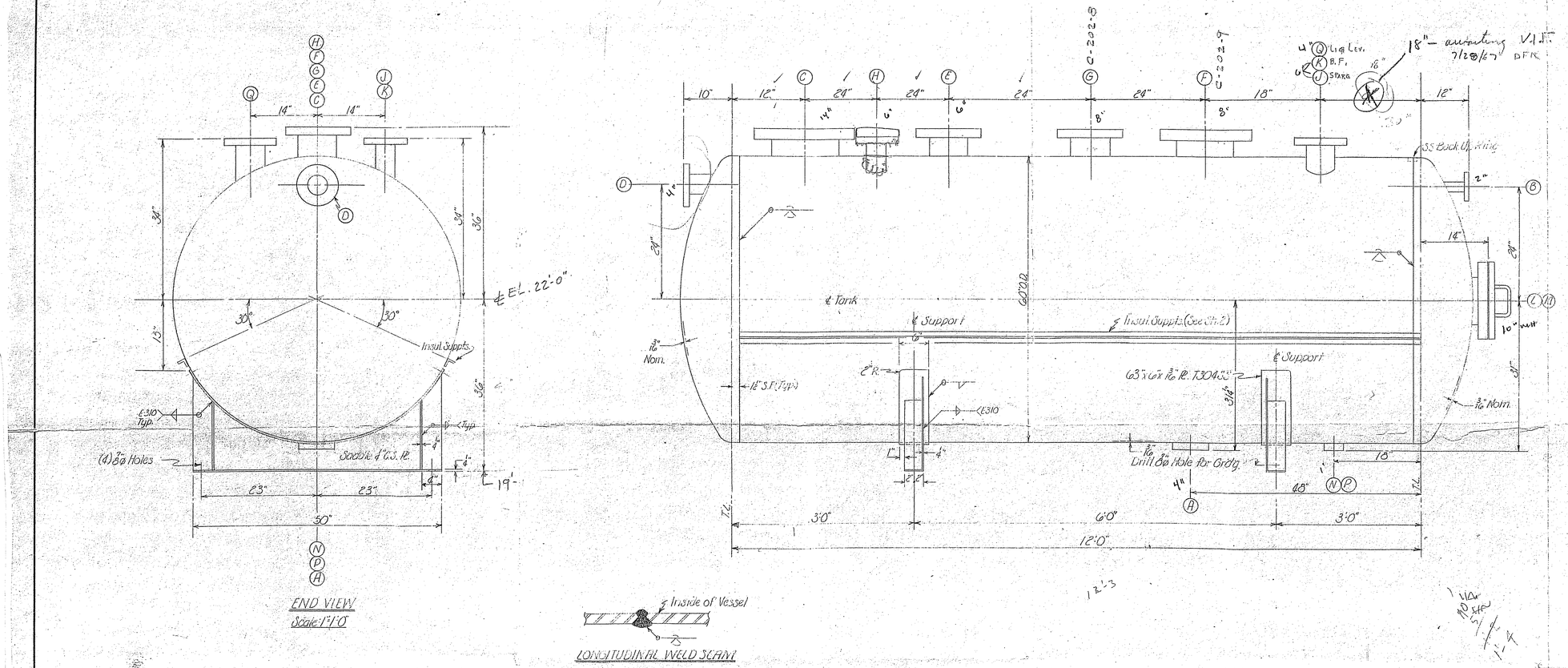

NOZZLE SCHEDULE										
MK.	SIZE	QUAN.	NOZZLE FLG. TYPE	NOZZLE FLG. RATG	NOZZLE FLG. MAT'L	NECK SCH.	NECK MAT'L	PROJ.	ORIENT.	SERVICE
A	4"	1		150#	F.S.	40	T316	SEE DET. "X"		LIQ. OUTLET
B	2"	1	SEE DETAIL							LIQ. INLET
C	14"	1	L.J.	150#	F.S.	40	T316			VAPOR OUTLET
D	4"	1	L.J.	150#	F.S.	40	T316			COND. INLET
E	6"	1	L.J.	150#	F.S.	40	T316			INLET (C-202-10)
F	8"	1	L.J.	150#	F.S.	40	T316			INLET (C-202-9)
G	8"	1	L.J.	150#	F.S.	40	T316			INLET (C-202-8)
H	6"	1	L.J.	150#	F.S.	40	T316			INLET (C-202-7)
J	6"	1	L.J.	150#	F.S.	40	T316			SPARE
K	6"	1	150#	T316	S.S. BL. FLG.					FOR NOZ. J
L	10"	1	L.J.	150#	F.S.		T316			HANDHOLE
M	10"	1	150#	F.S. BL. FLG.		(SEE DETAIL)				FOR NOZ. L
N	1"	1	PAD	(SEE DETAIL "Y")						THERMOWELL
P	1"	1	150#	T316	S.S. BL. FLG.					FOR MK. N
Q	4"	1	L.J.	150#	F.S.	40	T316			LIQ. LEVEL

DESIGN DATA

DESIGN PRESS. & TEMP. 1 PSIG 200 °F
OPERATING PRESS. & TEMP. 1 PSIG 150 °F
SPECIFIED CORROSION ALLOWANCE: NONE
CODE: NO STAMP: NO
STRESS RELIEF: NO RADIOGRAPH: NO
MAWP: ~ BY: ~
TYPE HEADS: STD. F&D
TYPE SUPPORT: SADDLES (2 REQ'D)
JOINT EFF: HEADS: 100% SHELL: 70%
CLADDING OR LINING SPEC: ~
SHIPPING WT: 3000# OPERATING WT: TEST WT: 18,400#
CAPACITY: 1855 GAL. (APPROX.)
EXTERNAL PIPE SPEC: SA 312 T316 SS
INTERNAL PIPE SPEC: ~
HYDROSTATIC TEST PRESSURE: FULL OF WATER - HOLD FOR TWO (2) HOURS

MATERIALS:

SHELL: 3/16" THK. T316 SS
HEADS: STD. F&D - T316 SS 3/16" Nom. THK.
FLANGES: F.S.L.J.
NOZZLE NECKS: A-312 T316 SS
BOLTING: A-193 GR. B7 BOLTS & A-194 GR. 2H NUTS
GASKETS: DURIBON TOSKALINE
INTERNALS:
SUPPORTS: A-7
INSULATION: 1/2" THK. CALCIUM SILICATE - BY OTHERS
PRINTING: C.S. PARTS - ONE S/C RED LEAD PARLON

NOTES:
1. All Gasket Surfaces to have Comm. Phono Serrated Finish.
2. All Bolt Holes to Straddle Natural Centerlines.
3. All Openings to Be Covered Prior to Shipment.
4. Interior of Vessel to Be Cleaned Free of All Rust Grease & Dirt.
5. Equipment Number to be Painted on Vessel (2" High Minimum)

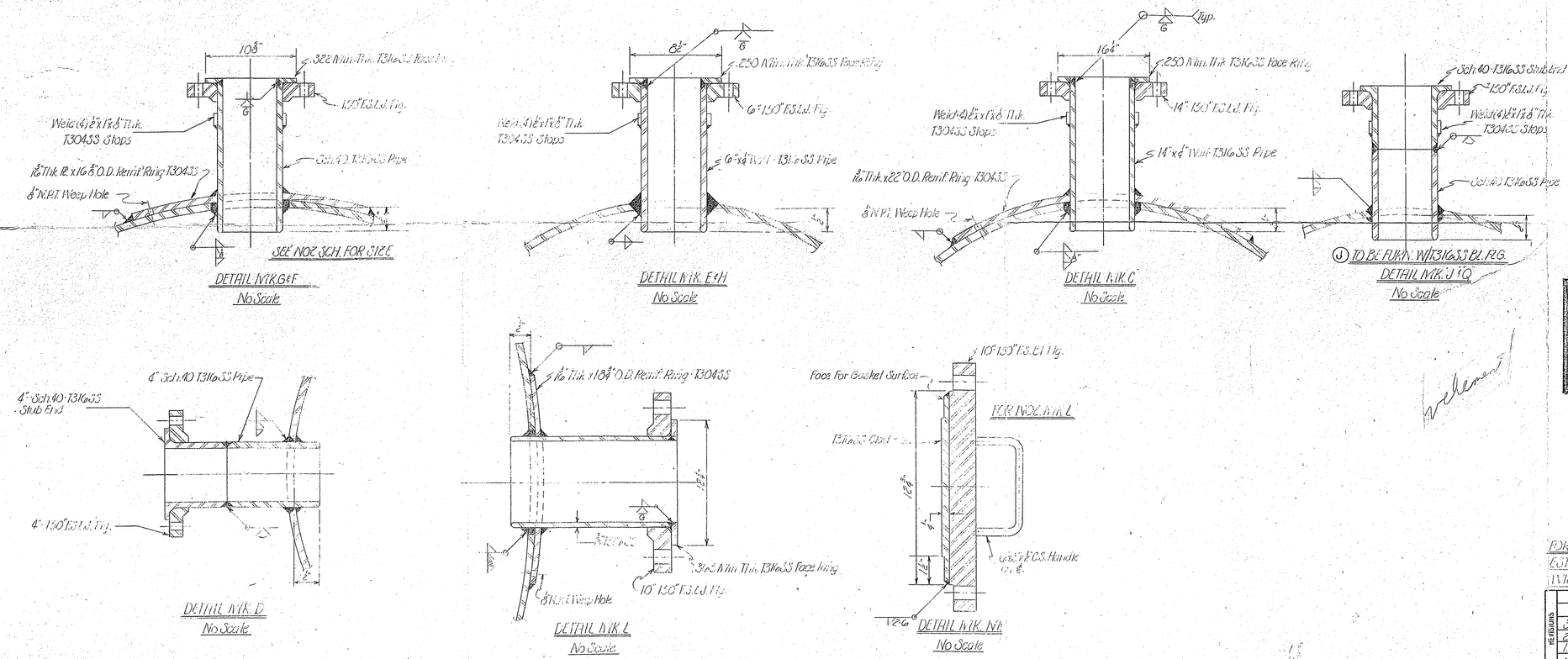

FILE COPY
MUST BE RETURNED
TO VAULT

FINAL PRINT
INDUSTRIAL PIPING SUPPLY COMPANY
Date 2-20-67
Signed Ronald White /dg

REF.
HERCULES INC. DWG. 026-2001-520324NE-A

B.P.F. NO. 37149	DATE 3/2/67
SHEET 1	APPARATUS NO. T-202-5 T-2202-5
PROJECT & ACCOUNT	26001 2001 2014
ORDER NO. 336-026-01079	
PLANT HANOVER — WILM., N. C.	
APPROVED H. G. Schurher	

EQUIPT. NO. T-2202-5
EQUIPT. NO. T-202-5 2 UNITS REQ'D.

FOR:
STERIFICATION
WILMINGTON, N.C.

INDUSTRIAL PIPING SUPPLY COMPANY
1501 S. CLARKSON ST. IPSCO THE MARK OF QUALITY CHARLOTTE, N. C.

D.N.T. OXIDATE SCRUBBER TANK
ASSEMBLY & DETAILS

Scale	NOTED	Hercules Inc.	
Drawn	D.G.	Wilmington, Delaware	
Checked		SHOP ORDER NUMBER	DRAWING NUMBER
Date		BZ-6308	D-66664
Approved			SHEET 1 OF 2

REVISIONS			
3.	Rev. Gasket Spec.	2-20-67	D.G.
2.	Misc. Rev. & Additions	1-18-67	D.G.
1.	Misc. Rev. & Additions		D.G.
NO.	DESCRIPTION	DATE	BY

#103576 HER-101

DUNCAN PRINTMAKERS—CHARLOTTE