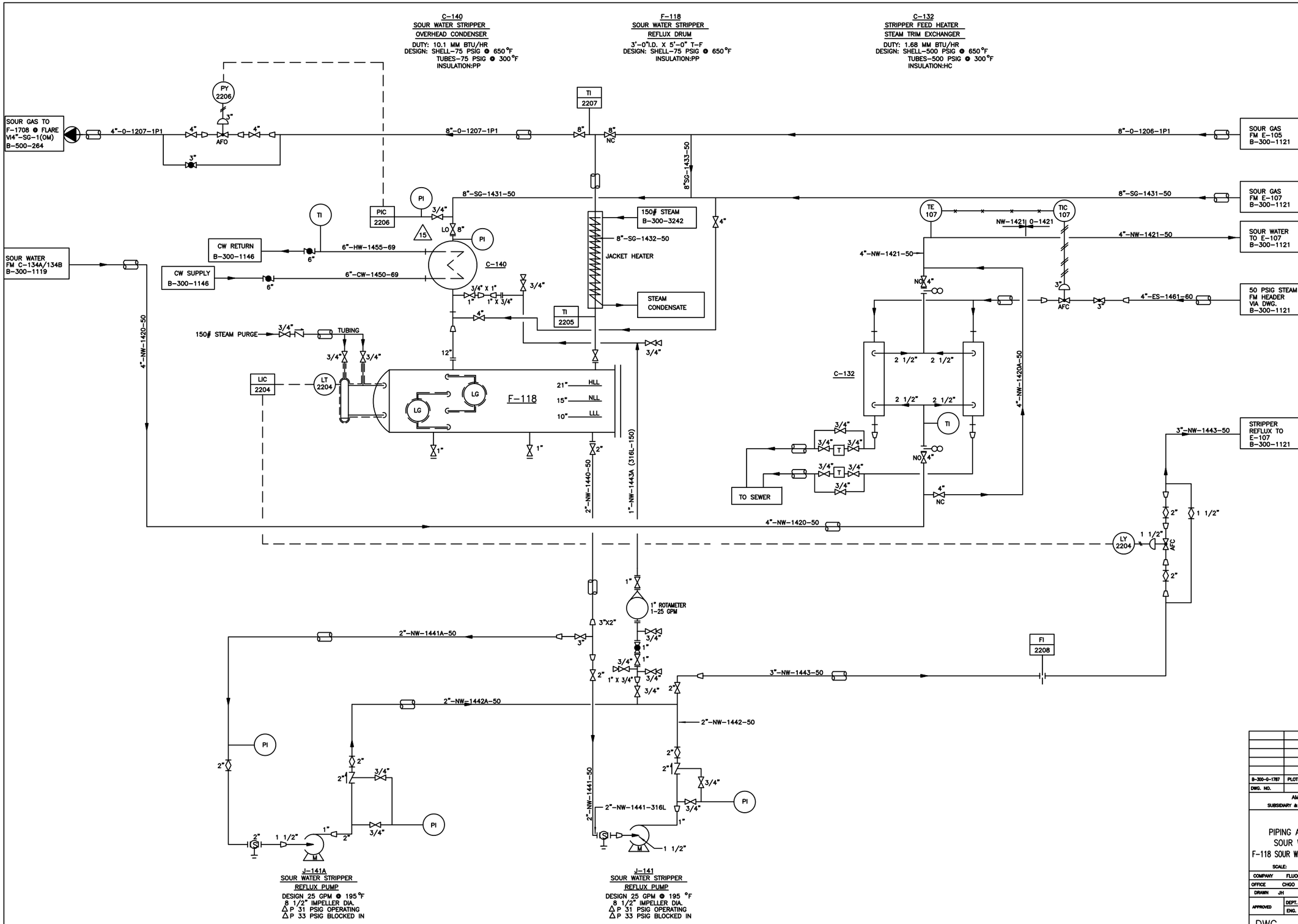

REVISIONS	BY
A ISSUED TO CLIENT FOR PRELIMINARY COMMENTS	UM
1 ISSUED APPROVED FOR CONSTRUCTION 6-5-85	JMB
2 REVISED AS NOTED 8-14-85	
FILMED 9-29-86	
B REVISED DWG SIZE TO B-300- GENERAL UPDATE PER 87 TAR	1-88 DRE
C FIELD REVIEWED 7-1-91	JED GES
D REV. C EDITING 11-4-91 CMM	JED
8 GENERAL UPDATE 11-08-93	GES
9 GENERAL UPDATE 11-17-94	GES
10 GENERAL UPDATE 01-03-96	GES
11 GENERAL UPDATE 05-05-98	GES
12 ADDED STEAM PURGE TO LT-2204, F-118 06/23/2003	DJC
13 ADDED KICK BACK LINE J-141 TO F-118. 4/2/2007	DDK
14 REVISED KICK BACK LINE J-141 TO C-140. 4/5/2007	DDK
15 LOCK OPEN 8" VALVE SHELL SIDE INLET OF C-140. MOC-CC-09-106 4/15/2010	KMS

B-300-G-1787 PLOT PLAN

DWG. NO. REFERENCE DRAWINGS

AMOCO OIL COMPANY
SUBSIDIARY & ASSOCIATED COMPANIES

COMBINATION UNIT
PIPING AND INSTRUMENT DIAGRAM
SOUR WATER STRIPPER SECTION
F-118 SOUR WATER STRIPPER REFLUX DRUM & PUMPS

SCALE: NONE

COMPANY	FLUOR 833511-30	PROJ 7724	
OFFICE	CHGO	DEPT.	APP'N. 1118
DRAWN JH	CAD	CHECKED AJM	
APPROVED	DEPT. HEAD	DATE	
	ENG. DEPT.	DATE	

DWG. B-300-G-1120 REV 15

PLOTTING SCALE: 1=1

CAD: 300-1120

NOTIFY ENGINEERING OF ALL CHANGES