MATERIALS OF CONSTRUCTION

ITEM NO.	DESCRIPTION	MATERIAL
1	HEAD	SA516 GR70
2	FOLLOWER	SA516 GR70
3	END SUPPORT	A36
4	TOP BAR	A36
5	BOTTOM BAR	A36
6	M36 DIA. TIE BAR	SA193 GRB7
7	TIE BAR HEX NUTS	SA194 GR2H ZINC PLATED
8	HEAT TRANSFER PLATES	SB265 G1 (TI)
9	STUDS	SA193 GRB7 ZINC PLATED
10	LINERS	Titanium

APV
FACTORY SERVICE
FOR PARTS AND SERVICE
CALL OUR CUSTOMER
SERVICE DEPARTMENT
1-888-278-4321

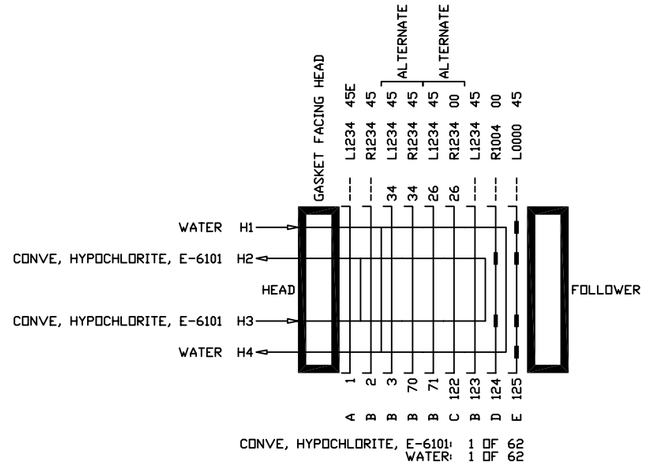

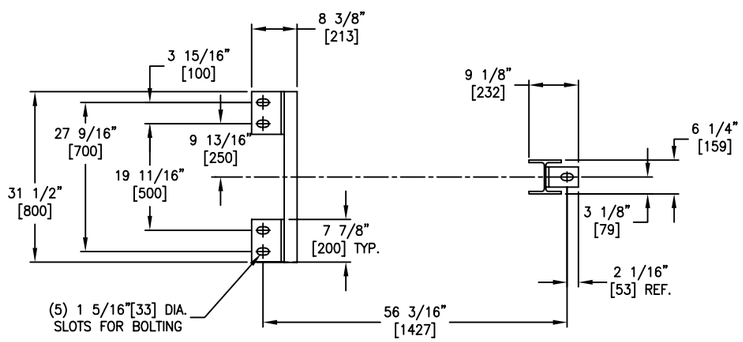

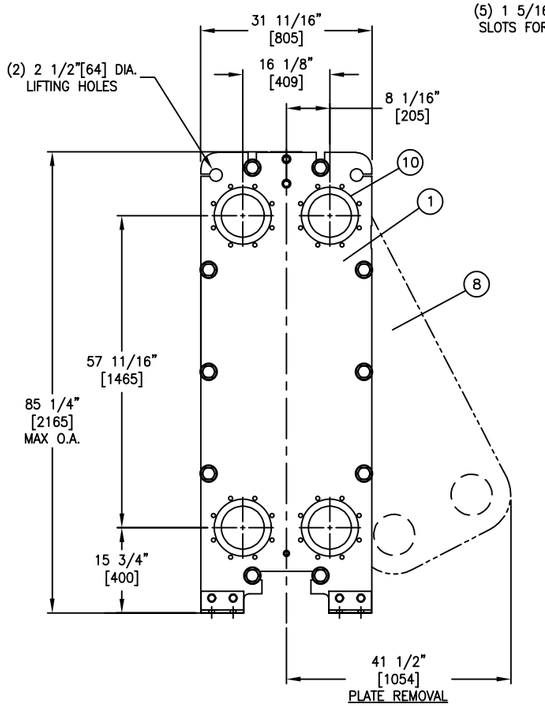

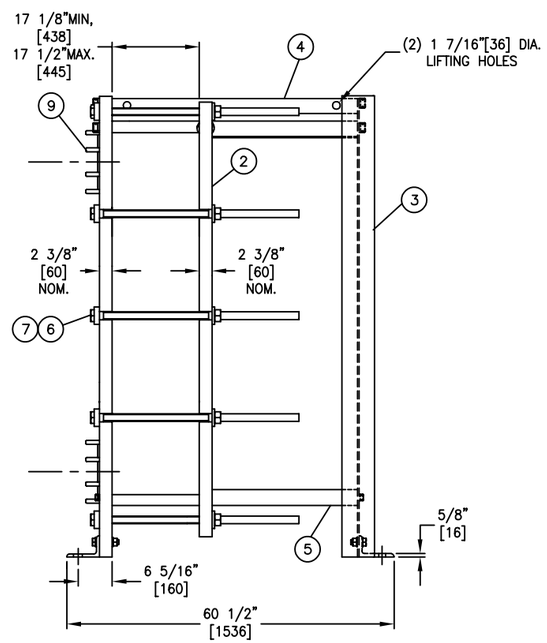

PLATE IDENTIFICATION
VIEWED FROM GASKETED SIDE OF PLATE

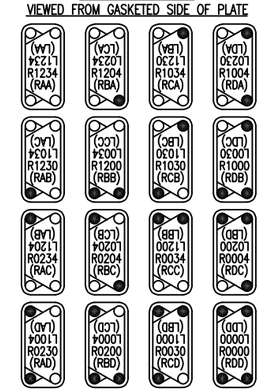

○ - BLANKED (HOLE) ● - UNBLANKED (NO HOLE)

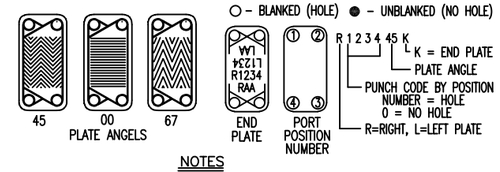

NOTES

1. THE INSTALLATION, OPERATION AND MAINTENANCE OF THIS HEAT EXCHANGER SHALL BE IN ACCORDANCE WITH THE APV PARAFLOW PLATE HEAT EXCHANGER INSTRUCTION MANUAL.
2. THIS MODEL HEAT EXCHANGER IS TIGHTENED USING A WRENCH ON THE TIE BAR HEX NUTS AT THE HEAD (FIXED COVER) END ONLY. CLEAN AND LUBRICATE THE THREADS BEFORE OPENING OR CLOSING USING A LUBRICANT COMPATIBLE WITH CARBON STEEL. **APV RECOMMENDS NEVER-SEEZ REGULAR GRADE. DO NOT USE COMMON GREASE.**
   THE PLATE PACK IS TO BE TIGHTENED IN ACCORDANCE WITH THE INSTRUCTION MANUAL SUPPLIED. DO NOT TIGHTEN BELOW THE MINIMUM DIMENSION SHOWN.
3. THE CUSTOMER IS RESPONSIBLE FOR PROVIDING:
   - ANCHOR BOLTS PER ASTM A36 MINIMUM WITH A RECOMMENDED DIAMETER OF 1 1/8".
   - PROTECTION AGAINST START UP OR OPERATING PRESSURES EXCEEDING THE MAXIMUM ALLOWABLE WORKING PRESSURE.
   - PIPING TO THE FOLLOWER OR CONNECTOR GRIDS THAT ALLOWS FOR FREE MOVEMENT WHEN THE UNIT IS OPENED FOR SERVICE AND PROVIDES FLEXIBILITY FOR THE VARIATION OF THE COMPRESSED PLATAGE DIMENSIONS.
4. LINED STUDDED PORTS ARE PROVIDED WITH A SMOOTH RAISED FACE FINISH.
5. BOLT HOLES STRADDLE CENTERLINES SHOWN.
6. DIMENSIONS ARE SHOWN IN INCHES. DIMENSIONS IN BRACKETS [ ] ARE IN MILLIMETERS.
7. STANDARD TOLERANCES:
   FRAME AND FOUNDATION BOLT LOCATIONS: ±1/4 INCH [±6mm]
   NOZZLE CENTERLINE AND FACE DIMENSIONS: ±1/8 INCH [±3mm]

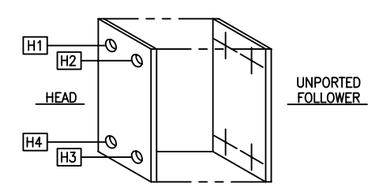

DESIGN SPECIFICATIONS

DESIGN CODE	ASME SECTION VIII DIV 1 2004 EDITION 2006 ADDENDAA
MAX. ALLOWABLE WORKING PRESSURE	6.5 BARG
MINIMUM DESIGN METAL TEMPERATURE	-29 °C. @ 6.5 BARG
HYDROTEST PRESSURE	8.5 BARG
MINIMUM OPERATING TEMPERATURE	-29°C.
MAXIMUM OPERATING TEMPERATURE	140 °C.
SERIAL NUMBER	G2007000880
HEAT TRANSFER AREA	103.9 M2
FRAME SIZE	NO.1
MAXIMUM FRAME CAPACITY	172 PLATES
DRY WEIGHT	2163.2 KG
FLOODED (OPERATING) WEIGHT	2488.4 KG
TOTAL LIQUID VOLUME	326.3 LITERS
FINISH	APV STANDARD PAINT 3196
ACCESSORIES SUPPLIED	ASME U STAMP, SS SHROUD

OPERATING CONDITIONS

LIQUID	FLOW RATE (kg/h)	TEMP.(°C)	ΔP (bar)
Conve, Hypochlorite	238152	43.9 → 35.8	0.48
WATER	238804	32 → 39.5	0.46

BILL OF MATERIALS

Plates (Total: 125)

Qty	Part Number	ID	Description
1	4624K4XTX6AEEXA	A	TR9GN (45) END Ti 0.6 PCL EPDM RC (BL/WH)
96	4624F4XTX6AEEXA	B	TR9GN (45) FLOW Ti 0.6 PCL EPDM RC (BL/WH)
26	4620F4XTX6AEEXA	C	TR9GN (0) FLOW Ti 0.6 PCL EPDM RC (BL/WH)
1	4620FCXTX6AEEXA	D	TR9GN (0) FLOW Ti 0.6 PCL EPDM RC (BL/WH)
1	4624F0XTX6AEEXA	E	TR9GN (45) FLOW Ti 0.6 PCL EPDM RC (BL/WH)

Frame

Qty	Part Number	Description
1	3085007G1G1G1G1	Head
1	3085008AXAXAXAX	Follower
1	ASME U STAMP	ASME Inspection and U Stamp
1	TR9GNXM11XXX11B	TR9GN M-11/1

Fitting

Qty	Part Number	Pos	Description
4	080HCDTR60A	H1,H2, H3,H4	NPS 8.0 Flange (Studded) Titanium Class 150 (Mates With) ANSI B16.5

Accessories

Qty	Part Number	Description
1	500536	Spray Deflector
1	BASICDOCFRAME	AutoCAD Drawing w/ Frame Dimensions

CARISAL Limited
Trinidad, West Indies
TAG #: 2-E-6101, Hypochlorite Cooler

G2007000881

P.O.NO: TTK-00000008

invensys® APV
APV Products
1200 W. Ash Street
Goldsboro, NC 27530
Tel: (919) 735-4570/Fax: (919) 581-1134

CONFIDENTIALITY NOTE: THE INFORMATION CONTAINED HEREON IS OF A CONFIDENTIAL NATURE AND IS THE PROPERTY OF APV PRODUCTS GOLDSBORO, NC, USA. IT SHALL NOT BE PHOTOGRAPHED, PHOTOSTATED, OR REPRODUCED IN ANY MANNER NOR USED FOR ANY PURPOSE WHATSOEVER EXCEPT WITH WRITTEN PERMISSION OF APV PRODUCTS GOLDSBORO, NC, USA.

Description:			
TR9GN M-11 PLATE HEAT EXCHANGER			
Checked: Date:	Supersedes:	Scale: N.T.S.	Sheet: 1 OF 1
Approved: Date:	Drawn: HSB Date: 4OCT07	Drawing No.: 0700881	Rev. 00

REV.	BY / DATE	CK. BY / DATE	DESCRIPTION AND LOCATION

CAD File: 0700881

AUTOCAD