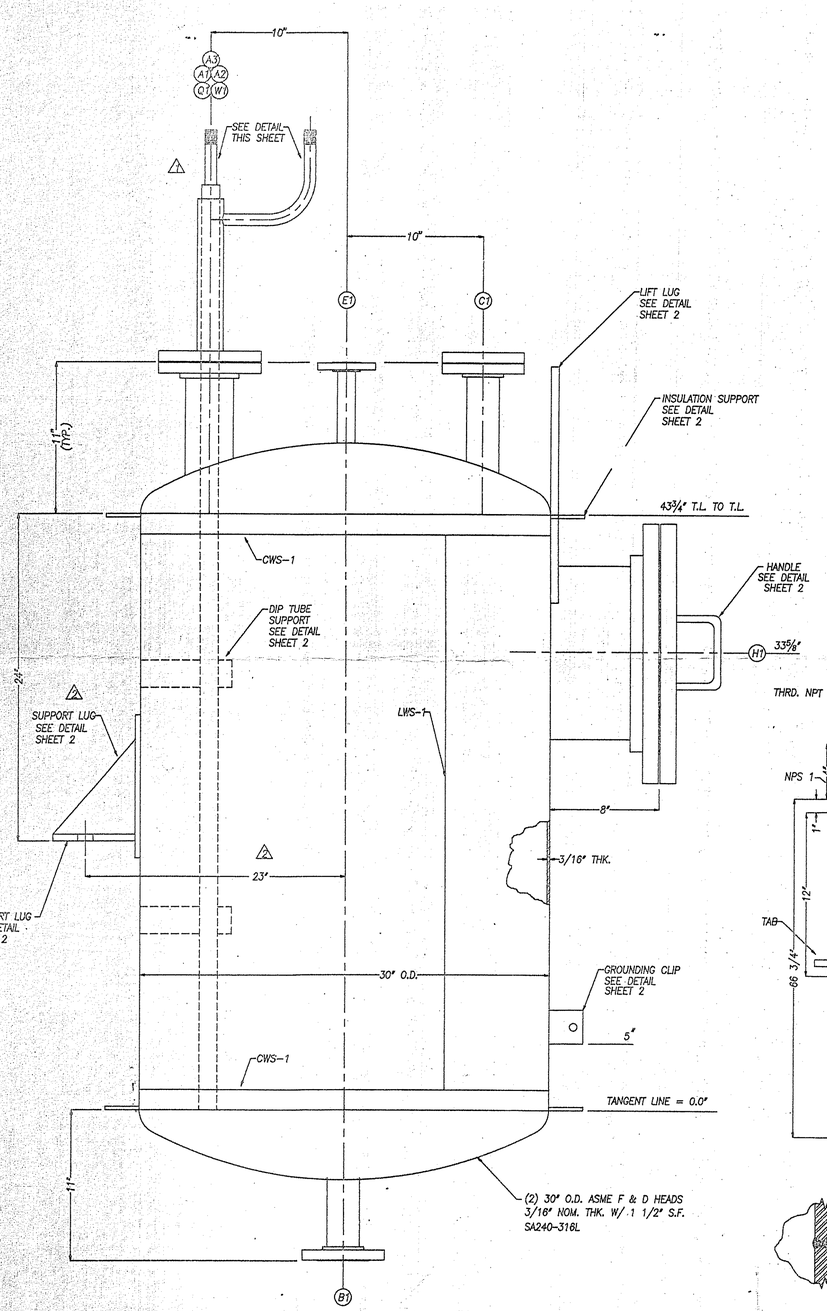

ELEVATION

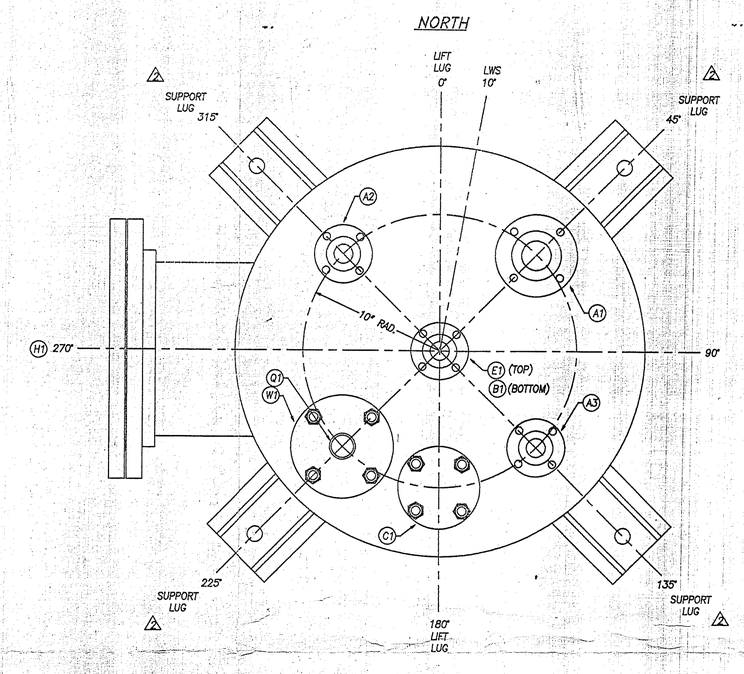

ORIENTATION

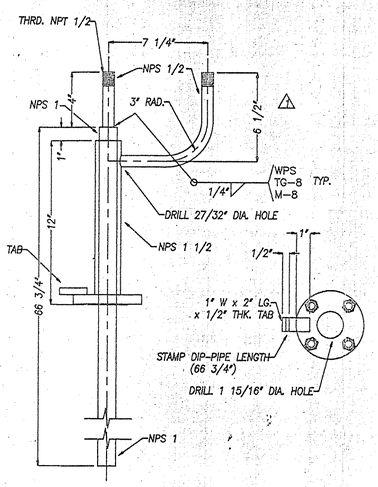

CIRC. WELD SEAM DETAIL

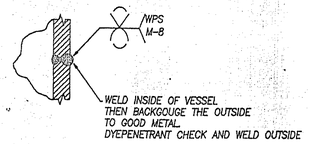

LONG. WELD SEAM DETAIL

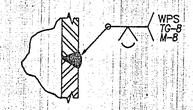

CLOSING HEAD WELD SEAM

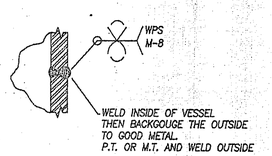

NOTES:

1. ALL NOZZLE BOLT HOLES TO STRADDLE NATURAL CENTERLINES OF THE VESSEL.
2. GRIND AND RADIUS ALL SHARP CORNERS PER ASME CODE.
3. NO SPLATTER OR ARC STRIKES ARE PERMITTED ON THE VESSEL. ARC STRIKES ARE TO BE REMOVED BY GRINDING. A LIQUID PENETRANT EXAMINATION OF THE GROUND AREA SHALL BE PERFORMED TO ASSURE CRACKS HAVE NOT RESULTED FROM THE ARC STRIKE.
4. CLEAN AND DRAIN BEFORE SHIPMENT AND PROTECT ALL OPENINGS W/ COVERS.
5. CERTIFIED MATERIAL TEST REPORTS (CMTR'S) SHALL BE PROVIDED FOR EACH HEAT OF MATERIAL FOR EACH MATERIAL USED ON THE VESSEL.

NOZZLE SCHEDULE

MK.	SIZE	RATING	FACING	NECK	REIN. PAD SIZE	COMMENTS
A1	2"	150#	LJ	SCH 80S		RHODIMET INLET
A2	1½"	150#	LJ	SCH 80S		SEPARATOR INLET
A3	1½"	150#	LJ	SCH 80S		PUMP RECYCLE
B1	2"	150#	LJ	SCH 80S		RHODIMET OUTLET
C1	2"	150#	LJ	SCH 80S		SPARE W/ BLIND FLANGE
E1	1½"	150#	LJ	SCH 80S		VENT
H1	12"	150#	LJ	SCH 40S		INSPECTION OPENING
Q1	1½"	150#	LJ	SCH 80S		LEVEL DIP-PIPE
W1	3"	150#	LJ	SCH 40S		SUPPORT FOR Q1

CERTIFIED BY
SISTERSVILLE TANK WORKS, INC
SISTERSVILLE, W.V.

SHELL SIDE	JACKET SIDE
11 PSI AT 284 °F	PSI AT °F
MAX. ALLOWABLE WORKING PRESSURE	MAX. ALLOWABLE WORKING PRESSURE
-1 °F AT 11 PSI	°F AT PSI
MIN. DESIGN METAL TEMP.	MIN. DESIGN METAL TEMP.

SER.NO. 92-240 YEAR BUILT 1992

SISTERSVILLE TANK WORKS, INC.
NAME PLATE DETAIL

MATERIALS OF CONSTRUCTION	VESSEL OR SHELL SIDE
SHELL	SA240-316L
HEADS	SA240-316L
FLANGES	SA105
NOZZLE NECKS	SA312-316L
VESSEL SUPPORTS	SA516-70
EXT. BOLTS & NUTS	SA193-B7 & SA194-2H PER MOC-615
INT. BOLTS & NUTS	316 S.S.
GASKETS	SPIRAL WOUND 316 SS W/ PTFE FILLER/ GRAFOIL GR. GHR
DIRECT ATTACH.	SA240-316L

DESIGN CONDITIONS				
DESIGN PRESS.	11	PSIG	5 oz/in²	VAC
DESIGN TEMP.	284	°F	-1	MIN. °F
OPERATING PRESS.	4.26 @ BTM.	PSIG		VAC
OPERATING TEMP.	257	°F	125	°C
CORR. ALLOW.	NONE			
CODE	DESIGNED & FAB. PER ASME SECT. VIII, DIV. 1, 1989 ED., ADD. 91			
CODE STAMP	NOT REQUIRED			
NAT'L BD. REG.	NOT REQUIRED			
STRESS RELIEF	NOT REQUIRED			
RADIOGRAPH	SPOT PER UW-52			
JOINT EFF.	85%			
HYDRO TEST	20 PSI @ TOP			
SP. GR. OF LIQUID	1.17			

CAPACITIES AND WEIGHTS					
OPERATING CAP.	146	GAL.			CU.FT.
FULL CAPACITY	153	GAL.		19.2	CU.FT.
EMPTY WEIGHT	917	LBS.	FULL H_2O	2,115	LBS.
OPERATING WT.		LBS.	FULL PROD.	2,319	LBS.

SURFACE PREPARATION
BRUSH-OFF BLAST CLEANING PER SSPC=SP 7-63
PAINTING (1) COAT OF EPOXY-PHENOLIC 6 MILS (MIN.) TO 7 MILS (MAX.) DRY
MANUFACTURER: WISCONSIN PRIMER/FINISH: PLASITE 7122-H COLOR: GREEN

SISTERSVILLE TANK WORKS, INC.
ENGINEERING DEPARTMENT
1942 McCOY STREET
SISTERSVILLE, W.VA. 26175

CUSTOMER	PURCHASE ORDER NO.	DATE OF P.O.
LIFE SCIENCE	8549-490028	06-19-92

FILTERED RHODIMET RECEIVER
ITEM NO. 4230

DRAWN BY	DATE DRAWN	SHEET	DWG. NO.:	REV.
M.P.S.	06/25/92	1 OF 2	92-240	2

6395-29399

REVISIONS

NO.	DATE	DESCRIPTION	BY
0	7-22-92	RELEASED FOR FABRICATION	M.P.S.
1	9-29-92	REVISED PER CUSTOMER	M.P.S.
2	10-15-92	REVISED PER CUSTOMER	M.P.S.

PLOTTED: 06/28/92 17:08:34