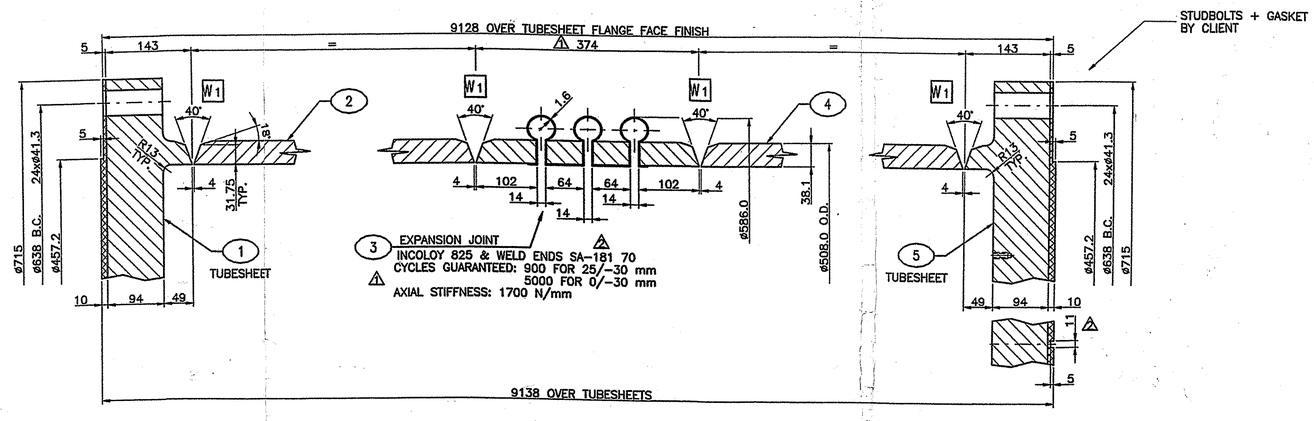

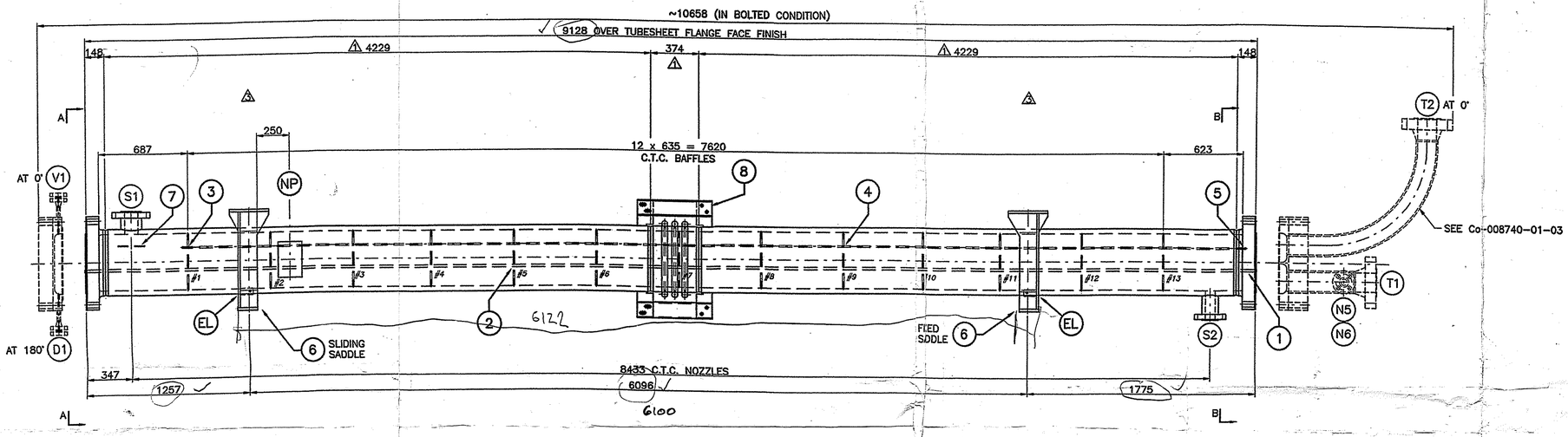

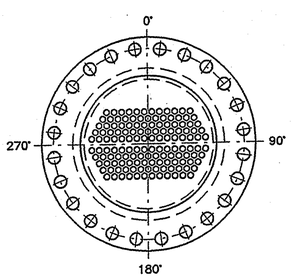

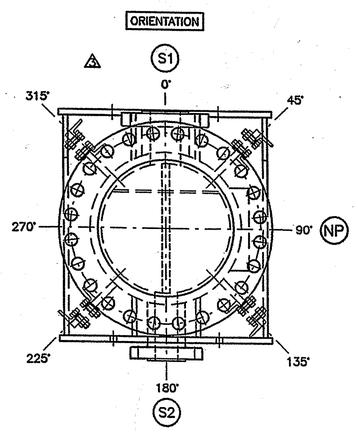

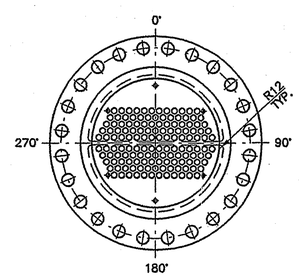

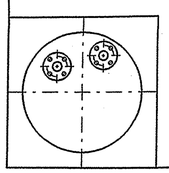

AANSLUITINGEN NOZZLE SCHEDULE

N	AANT. NUM	NOM. DIA. SIZE	DRUK PRESS	FLENS FLANGE	BUISEINDEN NECK	VERSTERK. REINF.PAD	L L	BESTEMMING DESTINATION	OPMERKINGEN REMARKS	FLENS CODE FLANG CODE	NA/S CODE WELD CODE	BIND CODE BIND CODE
S1	1	4"	900#	LWNRF	ø158.7x28.55		391	INLET		303	M01	
S2	1	3"	900#	LWNRF	ø127.0x25.4		441	OUTLET		303	M01	

LASPROCEDURES WELDING PROCEDURES

LAS Nr WELD Nr		LAS Nr WELD Nr	
W1	W135	W8	
W2	W181 or W147	W9	
W3	W126/1	W10	
W4	W712/8	WF1	W104 or W104/1
W5	W8740/1	WF2	
W6	W205 or W292	WF3	W338
W7		WF4	W584/1

MATERIALEN MATERIALS

	SHELLSIDE	TUBESIDE	CERTIFICAAT
MANTEL SHELL	SA-106 B		3.1 B
DEKSEL TOP	------		----
BODEMS HEADS	------		----
BUIZENPLATEN TUBESHEETS	SA-350 LF2 + SB-265 1		3.1 B
BUIZEN TUBES	SB-338 9 SEAMLESS		3.1 B
UITZETVOEG EXPAND JOINT	INCOLOY 825		----
FLENZEN FLANGES	SA-350 LF2		3.1 B
BUISEINDEN NECKS	------		----
BOUTEN BOLTS	SA-193 B7		ST
MOEREN NUTS	SA-194 2H		ST
STEUNEN SUPPORTS	SA-516 70		3.1 B
SCHOTTEN BAFFLES	SA-240 321		3.1 B
DICHTINGEN GASKETS	SEE DWG.		----
TREKSTANGEN TIE-RODS	SA-479 304		----
AFSTANDSBUIS SPACERS	SA-213 TP321		----

DESIGN DATA

	SHELLSIDE	TUBESIDE
ONTWERPDRUK & TEMP. DESIGN PRESS. & TEMP.	88 BARG AT 350 °C	88.6 BARG AT 307.2 °C
WERKDRUK & TEMP. WORKING PRESS. & TEMP.	76 BARG AT 292.3 °C	78.5 BARG AT 283 °C
MIN. ONTW. METAL TEMP. MIN DESIGN METAL TEMP.	0 °C AT 88 BARG	
BEPROEVINGSDRUK TEST PRESSURE	116.9 BARG	115.2 BARG
RADIOGRAFIE RADIOGRAPHY	FULL	
CORROSIETOESLAG CORROSION ALLOWANCE	3 mm	1.6 mm
MIN LASCOEFFICIENT MIN JOINT EFFICIENCY	1	
WARMTEBEHANDELING HEAT TREATMENT	NO	
NORMEN CODES	ASME VIII Div.1 Ed.98 Add.00 + TEMA CLASS 'R'	
GEWICHT WEIGHT	6500 Kg	
INHOUD CAPACITY	1.3 m3	
PRODUKT MEDIUM		

NOTES:
- FILLET WELDS 0.7 Tmin (max 6.3); 0.5 Tmin (max 9.5); FOR OUTSIDE WELDS OF NOZZLE REINF. PLATES, AND SETUP FLANGES; UNLESS NOTED
- TACKWELDS ACCORDING TO ROOT LAYER(S) OF APPLICABLE WELDING PROCEDURE
- NO SPARES REQUIRED
- FOR NON-DESTRUCTIVE EXAMINATIONS: SEE LOFC 008740-01
- INSULATION BY OTHERS
- FLANGE FACE FINISH: Ra: 3.2-6.3µm
- FLANGES ≤24" ACC. TO ANSI B16.5
- TUBESIDE SHALL BE TESTED WITH ORIGINAL CHANNELS
- SHEAR LOAD TEST AT ELEVATED TEMPERATURE OF 350°C
- ELEVATED TEMPERATURE TENSILE TEST ON TUBE SAMPLES AT 350°C
- PULL OUT TEST AT ELEVATED TEMPERATURE OF 350°C ON WELD SAMPLE TUBE/TUBESHEET ACC. TO ASME VIII Div.1 App. A

PAINTING:
- Ti PARTS: CLEANED, PICKLED AND FERROXYLTEST
- C.S. PARTS: SHOTBLASTING SA 2.5
  1 COAT OF INORGANIC ZINC 40µm DFT

REV.	WIJZIGINGEN MODIFICATION	DATUM/DATE	GETEK. DRAWN	NAGEZ. CHK'D	GOEDK. APP.
5					
4	COMMENTS COEK: WELDPROCEDURES ADDED	27-03-02	K.B.		
3	COMMENTS DUPONT: SUPPORTS CHANGED	18-03-02	K.B.		
2	COMMENTS DUPONT & COEK	05-02-02	K.B.		
1	COMMENTS DUPONT.	11-10-01	D.D.		
0	FOR COMMENTS.	05-09-01	K.B.		

SCHAAL SCALE 1/20 1/10

KLANT CUSTOMER

DUPONT

This drawing/document is the property of COEK. The data, information or any part of the drawing/document hereon shall not be copied, reproduced, loaned or used for any purpose without written permission from COEK.

REFERENCE DRAWINGS

Co-Nr'S	DESCRIPTION
008740-01-01	NAMEPLATE
008740-01-02	DETAILS
008740-01-03	REPLACEMENT ELBOW FOR 'T2'

FEED PREHEATER E-1214 C
REPLACEMENT SHELL & TUBEBUNDLE

CONSTRUCTIE WERKHUIZEN
COEK ENGINEERING N.V.
GEEL - BELGIUM

Co-008740-01-00 4

WN 008740-01