#100451, #100452, #100453, #100454

Note:
Not to scale.
Messurements in mm.

(As built)

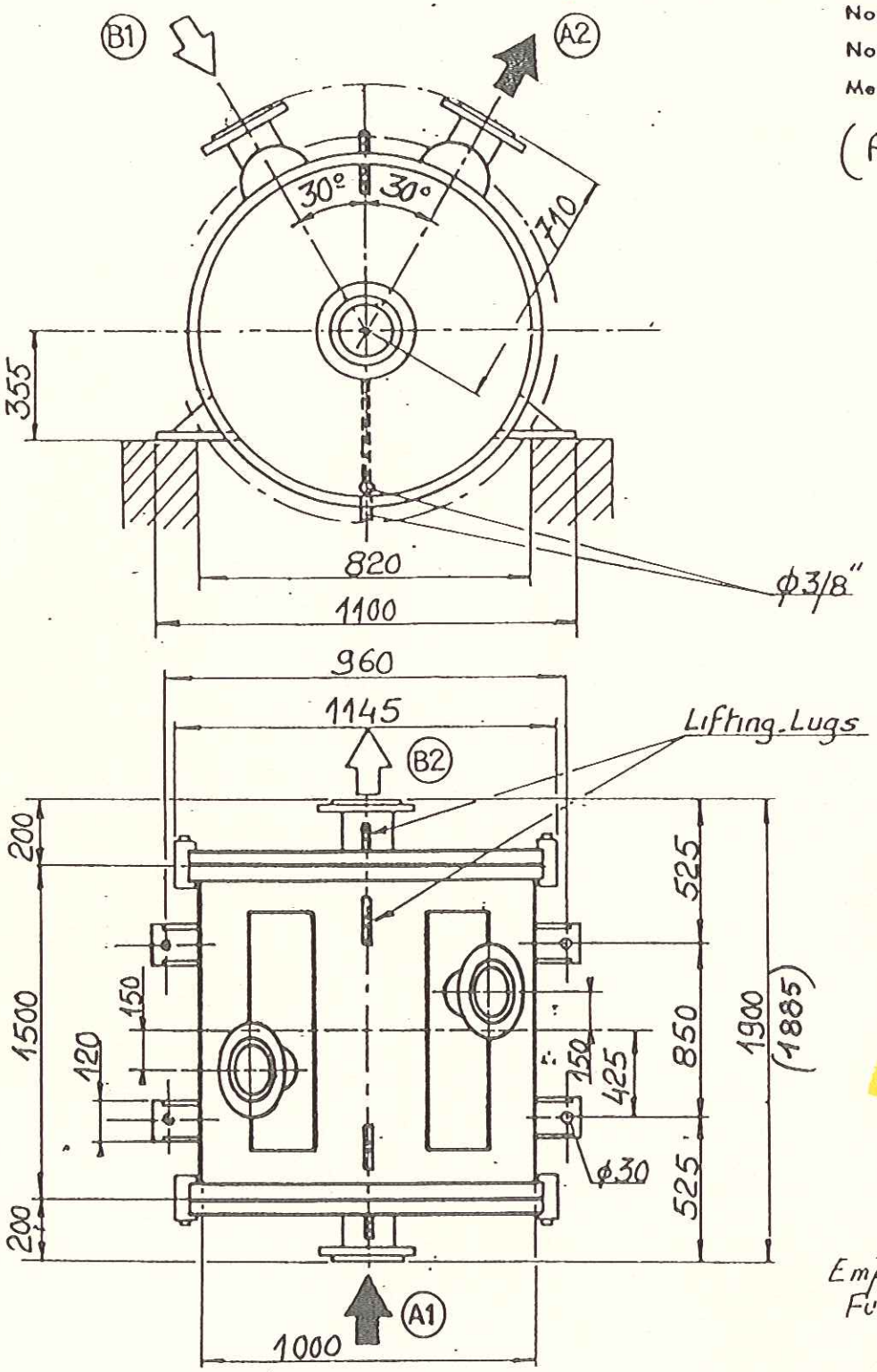

1E413 A/B

2E413 A/B

Empty weight : 1800 Kg ~
Full weight : 2950 Kg ~

Area m²	Material	Spacing mm		Gasket material	Flanges according to
61,96	AISI 316	Inner 14	Outer 16	CAF ITC	ANSI 150 lbs L.J

Medium and flowrate	Temperature °C		Working pressure bar	Design pressure bar	Design temp °C	Test press at ~ 20 °C	Connection sizes		
Inner channel A WATER	In 28	Out 30,6	≤5	5	109	7.5	In A_1 6"	Out A_2 6"	Other 3/8"
Outer channel B CORN BROTH	In 34	Out 32	≤5	5	109	7.5	In B_1 6"	Out B_2 6"	Other 3/8"

Date sign.	Our order No	Your order No	Serial No	
10.6.85	5ME 60418		15941-15942 15943-15944	ALFA-LAVAL NEVERS
	Quotation No	Inquire No		

SPIRAL HEAT EXCHANGER — TYPE IH

CUSTOMER: SPEICHIM

Drawing No 7.364.319