INSTRUCTION BOOK No. 43

INSTRUCTIONS

FOR

INSTALLATION • OPERATION • MAINTENANCE

OF YOUR

SLY DUST FILTER

TYPE "EE"

This book contains instructions for installation, operation, and maintenance of this equipment. It is essential that it reaches the men who **INSTALL** and **USE** the equipment.

THE W. W. SLY MANUFACTURING CO.

4700 TRAIN AVENUE CLEVELAND, OHIO 44101

INSTRUCTION BOOK No. 43

GENERAL: To save time and expense in erection, employ one of our erecting superintendents, which also tends to insure proper operation and maintenance.

Keep General Arrangement drawings and Instruction Books available at all times.

Make no deviation from them.

Provide a firm and level foundation of a capacity for loads specified.

Gaskets and cement are furnished for air tight joints—be sure to use them.

The symbols EE-2, and 3 signify the number of tiers of cloth bags.

The high side of the case is called the front or clean air side. The lower side, the back or dust side. Face the front side for determining Right and Left hands.

The hand of the case is determined by the location of the shaking device when facing the front of the case, if 30 ft. long or less. Over 30 ft. a shaking device is used at both ends.

All hoppers are of standard width—6 ft.—with lengths of 3, 4, 5, and 6 ft., the depths terminating at a valve. In special cases the depth terminates in a trough instead of a valve and are known as trough hoppers.

ERECTION

REFER TO YOUR GENERAL ARRANGEMENT DRAWING

SUPPORT

Erect support on foundation, keeping level and square.

BOTTOM PANS—SK-2758-C

After removing L-3 on bottom pans P1-1, 2, 3, and 4, cement all pan flanges and fold a 4" gasket over L-3 (Section AA). Rebolt L-3 at ends and center of pans.

Install on support to correspond with hoppers shown on General Arrangement drawing.

HOPPER SEPARATORS—SK-2758-C

Fold a 4" gasket over B-26 (Section CC) and install between pans with end marked "back" at back of case.

NOTE: B-26 is not used with 1 hopper installations.

HOPPERS—SK-2758-C

Cement the outside of all hopper flanges.

Fold 4" gasket over hopper angles L-3 (Section KK) and bolt to the hopper flange marked "back." Use only three bolts. Install hoppers on support. Fold 4" gasket over L-4 R&L, (Section EE), and bolt to ends and center of hopper. Install gasket on remaining flanges of hopper (Section BB).

Install F-32 R&L, F-33, and gaskets (Section BB).

Bolt horizontal flanges of Angles L-3 and L-4 to the support.

CASE SHEETS AND DUST WALL ASSEMBLY—SK-2760-A, SK-4709 and SK-4710

Consists of end sheets CS-1, ES-2, and ES-3; side and top sheets in 2 and 3 ft. widths to conform with hopper lengths, and designated by End, Front, Back, and Roof. (SK-2760-A).

In bolting, tack the parts at their ends and center, adding remaining bolts after case is assembled.

Form back corner at one end (Section AA SK-2760-A) with side, end sheet, gasket, cement, and clip.

NOTE: One reinforcing bar, No. 1, 2, or 3, is added (See General Arrangement Drawing for location) for service of 10″ W.G. and over only.

Complete end assembly, using the two remaining end sheets ES-2 and 3 (Section BB SK-2760-A). Form the opposite front corner, using front sheet of width to correspond with back sheet. Cement entire length of flange of F-8 (SK-4709, Section AA). Install gasket on this flange and cement its top surface.

Select dust wall grid (SK-4709), of width to correspond to side sheets, cementing gasket on both vertical flanges, (Sections JJ and HH). Install this grid on F-8 and tack to end sheet. Install top sheet after cementing gaskets on top flanges of end sheets (SK-2760-A, Section DD), side sheets (Section EE) and grid flange SK-4709, (Section BB). Continue to add with gaskets and cement, the side sheets, (SK-2760-A Section BB) corresponding grids, and roof sheets for entire length of case and then install end sheets for remaining end, as outlined above.

Install at top of inside ends of case B-32 (SK-4709).

Install F-88 (SK-2758-C Sections HH and GG) at hoppers and end walls.

Install F-43 (SK-2758-C in hoppers with end marked "Back" at back of case.

NOTE: F-43 is not used in hoppers of 3 ft. length.

CASE—STRUCTURAL INNARDS—SK-4710, SK-4708, SK-4712

Bolt F-15-A and F-16-A with F-29 (SK-4710 Section AA) at their bottoms, to plain and shaking device ends. If General Arrangement Drawing specifies shaking device at both ends, use F-16-A at both ends. Bolt F-14 (SK-4710) to F-15-A and F-16-A (SK-4708) end sheets and F-9.

Bolt F-20-A to F-43 and B-26 (SK-4708 Section DD) through the use of one F-29 on each side of F-20-A. Between the F-29's bolt F-89 (SK-4708 Section CC).

Bolt F-13 (SK-4708 Section DD) to F-9, 20-A, and 21-A.

Install F-10 (SK-4712 and SK-4708) between F-15-A and 20-A, 16-A and 20-A, 20-A and 20-A, 20-A and 21-A.

Install Plates (SK-4708) F-57, 58, 59, and 60 on F-15-A and 20-A, and 21-A, and F-57, 58, and 58-A on F-16-A (SK-4708).

NOTE: The final bolting of the entire assembly, as referred to on page 2 should now be made.

Install grating FG-3 to 6 (SK-2758-C) on F-88.

SHAKING DEVICE DRIVE—SK-4711

Bolt platform frame firmly to support. Remove both Shafts F-103 from bearing. Install motor assembly. Level and bolt firmly to frame and case. First make sure leather grease seals are inserted in the counterbore of the bearing. Insert the ends of both rubber seals in the holes provided in plates F-106 and F-107. Bolt F-106 to the case (SK-4712). Clean both shafts, make sure they work freely in bearing, and connect shafts to eccentric yoke.

SHAKING DEVICE MECHANISM—(SK-4713 and 4711)

Place channel F-23-3 on shaft. Use four washers F-65 on each side of bearing DA-258 (SK-4711).

Tighten nut and insert cotter pins. Bolt plate F-106 to the bearing DA-258.

SHAKER ANGLES—SK-4712

Bolt with castellated nuts one end of F-25 (SK-4712) to F-23-3 and the other end to the links on F-15-A or 21-A.

NOTE: Tighten link bolt F-39 just to the point where F-25 will move freely, and then install the cotter pin in the nut. If the filter is over 12 ft. long F-28 is coupled to F-25 with a splice bolt F-37 and pipe spacer F-63 (SK-4712). Both ends of F-28 are supported by links (SK-4712) and locked in place with castellated nuts.

One coupling is omitted when filters have a shaking device at both ends.

SEAL PLATE—SK-4713

For clearance of F-23-3, two cloth bags are omitted from the center tier and are replaced with seal plate F-66-A (SK-4713). Cement edges of F-66-A to form seal with grids and bolt with 2 hook bolts F-75-A. On EE-2 no F-66-A seal plate is required.

INSTALLATION OF BAGS—SK-4710, SK-4714, and SK-4709

Install I bolt A-6 and Spring A-8 (SK-4714) in F-10. Place a 1" wire inserted cloth strip on the vertical face of the end grids (SK-4709 Section JJ) and a 2" strip where the grid sections join (Section HH).

Place F-7-A (SK-4714) in the bag with pins F-36-A and shoulder pin F-96 with bushing F-91 extending through the holes provided in the bag.

Pass the bag assembly through the grid from the front side of the case, hooking the open end of the bag over the pins in the grid (SK-4714) and the other end of the bag to A-6 by means of A-5.

NOTE: In placing the bag assembly through the grids be sure that the shoulder pins F-96 are at the end of each grid section (SK-4714) and that all pins F-36-A and F-96 are in the same horizontal plane as their respective bumper plates (SK-4710) F-57, 58, 59, and 60.

After installing all bags seal them (SK-4714 Section MM) at the open end with F-40 and FF-40 Long at intersection F-9 at their top and bottom.

Take up tension of bag with nut on A-6 to a spring length (A-8) of approximately 3½" keeping hook A-5 in a vertical plane. (SK-4714).

NOTE: After a few days the initial stretch will have taken place in the cloth and the springs should again be adjusted to a length of 3½".

Place cloth caps (SK-4714) F-83 over both ends of inner frames F-44 and insert two inner frames in each bag.

Install F-64 (SK-4713 Back Elevation) on pins F-96 and install bushing and cotter pins F-91.

DUST VALVE—SK-4717 and SK-4718

Bolt valve to bottom of hopper and cement around the entire connection.

For power driven valves consult your General Arrangement Drawing.

ADJUSTMENT—SK-4714, 4711, and 4712

Place eccentric (SK-4711) on dead center.

In this position check F-23-3 (back elevation SK-4713) so that it is parallel to F-20-A by measuring it at top and bottom. When parallel these distances are 18-13/16" for a 2 ft. and 30-13/16" for a 3 ft. grid section. If not parallel, make adjustment by adding or removing washers F-65.

INSTALLATION OF BAGS (Cont'd)

With eccentric on dead center and F-23-3 parallel to F-20-A, the setting of the cloth bags in the center tier should be parallel to F-20-A. If not, adjust them by adding or removing (SK-4711) washers F-65 on plunger shafts F-103.

Setting of bags in upper and lower tiers should correspond with those in middle tier. If not, adjust them by turning hook A-5 in the entire section (SK-4714) to the right or left.

Tighten nut and insert cotter pin (SK-4711) on plunger shaft F-103.

BAFFLE PLATE

Location of this member is very important and is governed by the location of the incoming dust pipe. Refer to your general arrangement for the pipe location and to SK-3800 and 4715 for the proper location of its baffle plate.

FINAL CHECKUP

1. Distance between center of vertical motor shaft (SK-4711) and case must be 12-13/16" plus or minus 1/16".
2. Pin connecting eccentric arm to plunger shafts (SK-4711) should be a sliding fit.
3. Nuts on plunger shafts should have their cotter pins.
4. All links (SK-4712) supporting actuating members must be free. (Under no circumstances should bolt be tightened to cause binding).
5. F-23-3 must be parallel to F-20-A (SK-4713).
6. All bags should be parallel with F-20-A when eccentric is on dead center.
7. If blow of bumper member F-64 is not equal on bumper plates F-57 to 60 (SK-4708) turn hook A-5 slightly to right or left.
8. Shaking device motor should operate at approximately 200 R.P.M. and for about 1½ minutes after a pause of 1 minute at periods in keeping with requirements.
9. Use a good grade of grease for eccentric and fan bearings, and lubricate gearhead motor in accordance with instruction plate attached to it.

MAINTENANCE

Every piece of machinery requires periodical inspection and attention to insure maximum efficiency. We therefore make the following suggestions to be followed in order that your filter will serve as it should:

After the filter is in operation five or six days, enter the clean air side, trace any visible dust leakage and cement these parts. If this is done properly it will not be necessary to do it again.

Make a general inspection each week, testing all parts of the cleaning device, tension on bags, repairing or replacing the baffle plate if worn through or nearly so.

Keep dust hopper valves closed tightly, to prevent short-circuiting of air and damage to bags.

Do not allow dust to accumulate in hoppers higher than one foot from bags.

If not housed, the outside of the case should be painted every year.

REPAIR PARTS

When ordering repair parts, refer to sketches and specify part numbers.

PIPING

For recommendations and specifications of piping see 85-E-1.

IMPORTANT

To obtain most efficient removal of dust from the filter bags, eliminate excessive wear, and reduce objectionable vibration, adjust the bumper channels as follows:

1. Loosen adjusting bolts on ends of bumper channels F-64, and turn them to an all-the-way out position. SK-5021.

2. Tighten eye bolt springs A-8 on filter bags to 3½″ compressed length. A ⅝″ type socket wrench is provided at erection of equipment. A standard spark plug type socket will aso fit the eye-bolt nut.

3. Turn all hooks, A-5 on back of bags to vertical position (hook-up).

4. Put pipe wrench on eccentric hub of Shaker Motor and turn eccentric until shafts are into bearing casting as far as possible. Now measure the length of shafts projecting from casting by placing rule on top of shaft. This measurement is taken from face of casting to square edge of milled flat on shaft. Move eccentric again so shafts move out of bearing casting exactly ½″.

5. Now the eccentric and shaker shafts are at Mid-Stroke position. The bumper channels F-64 should be adjusted to an evenly spaced position between the bumper plates F-59 or F-60 (plus or minus 1/16″). This measurement is taken from the end of the bumper channel to the bumper plate (not from the end of the adjustment bolt). If necessary the channels can be brought into correct center position by turning ALL bag hooks in each section one way or the other, not more than 90° (right angle) from the straight up and down position.

6. Turn the eccentric to move the shaker shafts another ½″, all the way out of the bearing casting.

7. In this position turn the ⅜″ adjustment bolts at one end of the bumper channels so that they are ⅛″ away from the bumper plates. Tighten lock nuts on bolts.

8. Turn eccentric to move shaker shafts all the way in.

9. Adjust the bolts at the other end of the bumper channels to provide clearance of ⅛″ from bumper plates; tighten lock nuts.

   Recheck by moving eccentric to full in, then full out position.

PARTS INDEX FOR SLY DUST FILTERS

Drawing	Old Part No.	New Part No.	Description
SK-4709	F-6	TDS-6	Dust Wall Mullion
SK-4714	F-7-A	TDS-7	Back Bag Mullion
SK-4709	F-9	ABTD-9	Dust Wall Frame End
SK-4712	F-10-2,3	O-10 (2) or (3)	Separator L (Takes A-6 Adj. Tension on Bag)
SK-4708	F-13	ABTD-13	Intermediate Brace
SK-4710	F-14	ABTD-14	Tie Bar (Ends)
SK-4712	F-15-A R and L	T-15 or D-15	Support (Plain End)
SK-4712	F-16-A R and L	T-16 or D-16	Support (Shaker Drive End)
SK-4712	F-20-A	T-20 or D-20	Intermediate Brace (No Splice) Used When Filter is less than 12′ 0″ lg.
SK-4712	F-21-A	T-21 or D-21	Intermediate Brace (When Splice is Required) Used When Filter is Over 12′ 0″ lg.
SK-4713	F-23-A	T-23 or D-23	4″ Shaker Channel
SK-4712	F-25-3 to 12	TD-25 (3) to (12)	Shaker Angle (Drive End)
SK-4712	F-28-3 to 12	TD-28 (3) to (12)	Shaker Angle (Plain End)
SK-4708	F-29	ABTD-29	Gusset Pl.—3/16″ Pl.
SK-2758-C	F-32	ABTD-32	Gusset on End Sheets
SK-2758-C	F-33	TD-33	Gusset Between Hoppers
SK-4714	F-36-A	O-7-2	Back Mullion Pins
SK-4712	F-37	TD-37	Connecting Bolt (F-25 to F-28)
SK-4712	F-38	TDS-38	Link (Shaker) 1¼″x¼″ Bar
SK-4712	F-39	TDS-39	Connecting Bolt
SK-4714	F-40	TDS-40	Washers for Holding Bag on Dust Wall
SK-4714	FF-40	TDS-60	Washers for Holding Bag on Dust Wall
SK-4708	F-43	ABTD-43	Hopper Tie Bar
SK-4714	F-44	TDS-44	Inner Spacers
SK-4708	F-57	TD-15-6	Bumper Plate (Bolted to F-15 - F-16)
SK-4708	F-58	TDS-15-5	Bumper Plate (Bolted to F-15)
SK-4708	F-58-A	T -16-5	Bumper Plate (Bolted to F-16)
SK-4708	F-59	TD-20-4	Bumper Plate (Bolted to F-20)
SK-4708	F-60	TDS-20-5	Bumper Plate (Bolted to F-20)
SK-4712	F-63	TD-63	Pipe Spacer
SK-4713	F-64-2,3	TDS-64 (2) or (3)	Bumper Channel 1¼″x¼″x⅛″ C.
SK-4711	F-65	TDS-65	Washer
SK-4713	F-75	T-102	Hook Bolt for Seal Pl.
SK-4712	F-80	TDS-15-7	Tail End Guide (Assemble on F-15)
SK-4714	F-83	TDS-83	Inner Spacer Cloth Caps
SK-4714	F-84	TDS-84	Rubber Caps for Back Mullions
SK-2758-C	F-88	ABTD-88	2″x2″x3/16″ L 13⅛″ Lg. (Kerlow Grating Support)
SK-2758-C	F-89-2,3	ABTD-89 (2 or 3)	2″x2″x3/16″ L Bottom Brace for Hopper Stiffener
SK-4714	F-91	O-8-1	Back Mullion Pin
SK-4714	F-96	O-8-2	½″ O.D.x11/32″ I.D.x13/16″ Lg. Steel Tube
SK-4711	F-103	TD-103	1 7/16″ Dia.x12¾″ Lg. C.R.S. Shaker Shaft
SK-4711	F-106	TD-106	Retaining Plate 5″x#14 Ga. 7½″ Lg.
SK-4711	F-107	TD-107	Retaining Plate 2¼″x#14 Ga. 6¼″ Lg.
SK-4714	A-5	O-7-3	Hook Bolt (Mullions)
SK-4714	A-6	TDS-206	Eye Bolts (For Adj. Bag Tension)
SK-4714	A-8	O-208	Springs (For Adj. Bag Tension)
SK-2758-C	P-1 (1,2,3,4)	TD-1 (3) to (6)	Dust Pans Hopper Lengths
SK-2758-C	L-3 (1,2,3,4)	ABTD-3 (3) to (6)	Base L's Hopper Length
SK-2758-C	L-4 R and L	TD-4 RL	Base L's on 7′ 10″ Ends
SK-2758-C	B-26	TD-26	⅜″x7′ 10″ Lg. Bar
SK-2760-A	S-1	AT or BD-41	Clip for Back Sheets
SK-2760-A	S-2	AT or BD-42	Clip for Front Sheets
SK-2760-A	ES-2	AT or BD-96 RL	End Sheet
SK-2760-A	ES-3	T-24 or D-24 RL	End Sheet
SK-2760-A	E-1	ABTD-45	Clip for Roof
SK-2760-A	E-1	ABTD-58	Clip for Roof End
SK-2760-A	CS-1	T-30 or D-30 RL	End Sheet
SK-2760-A	"C"	AT or BD-35	Clips
SK-2760-A	"D"	AT or BD-36	Clips
SK-4711	DA-257	TD-257	Shaker Shaft Bearing
SK-4711	DA-258	TD-258	Casting

SALES AND ENGINEERING DATA

SLY DUST FILTERS

HOPPER ASSEMBLY

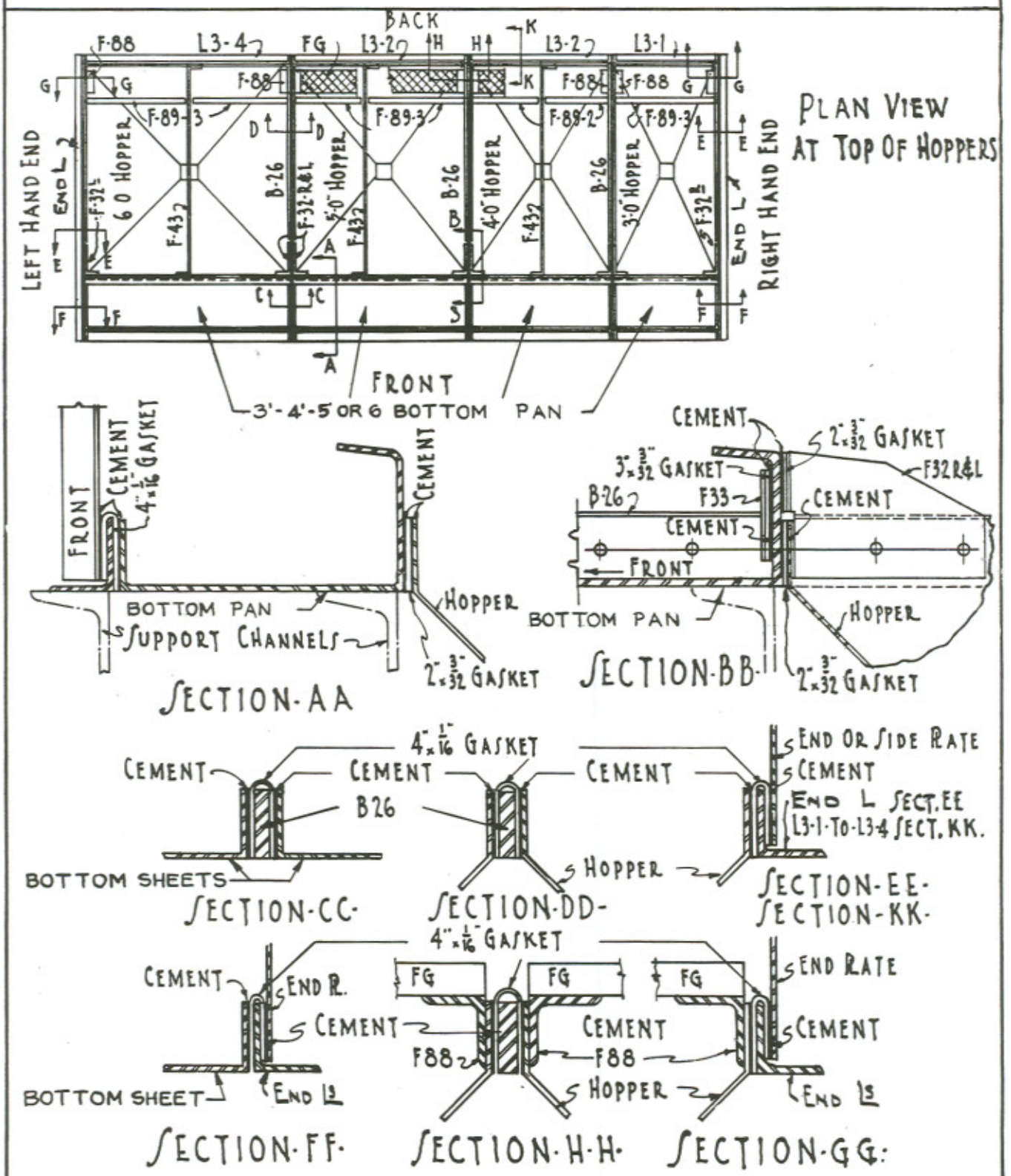

THE W.W. SLY MANUFACTURING CO., CLEVELAND, O. | 2-4-39 | SK-2758-C

SALES AND ENGINEERING DATA

SLY DUST FILTERS

CASE ASSEMBLY

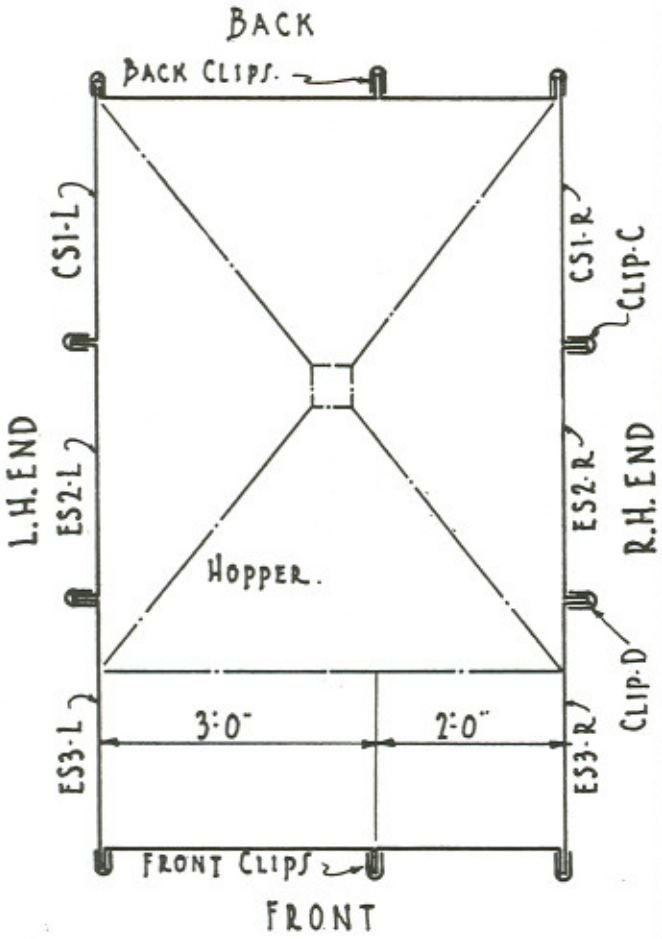

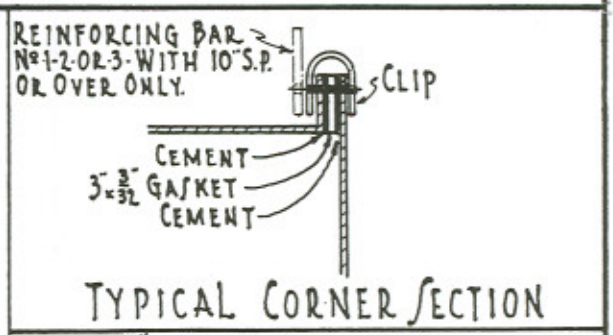

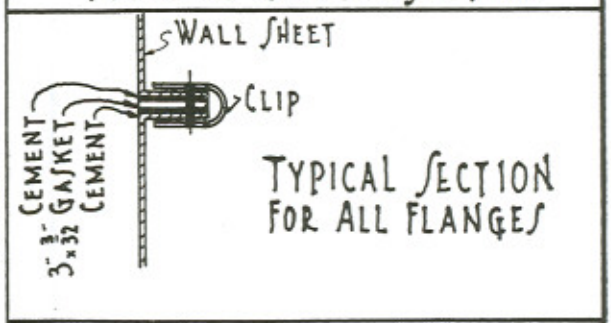

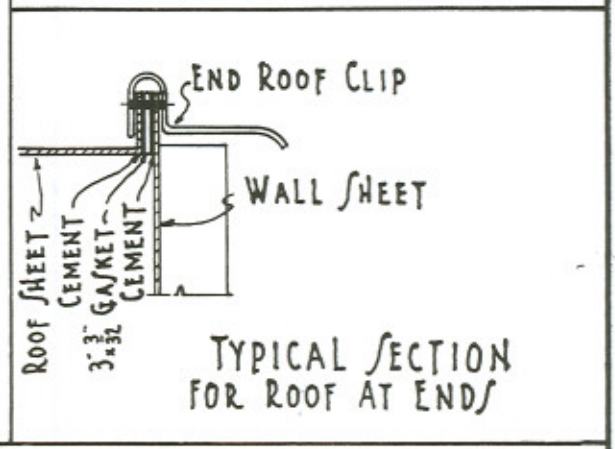

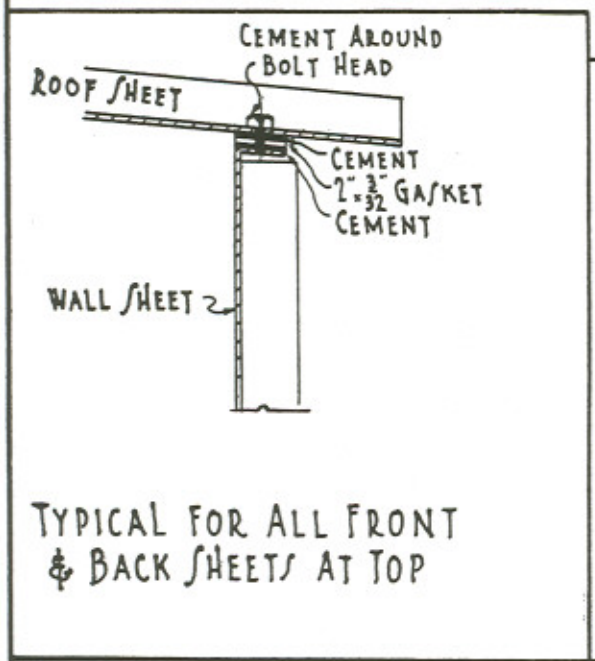

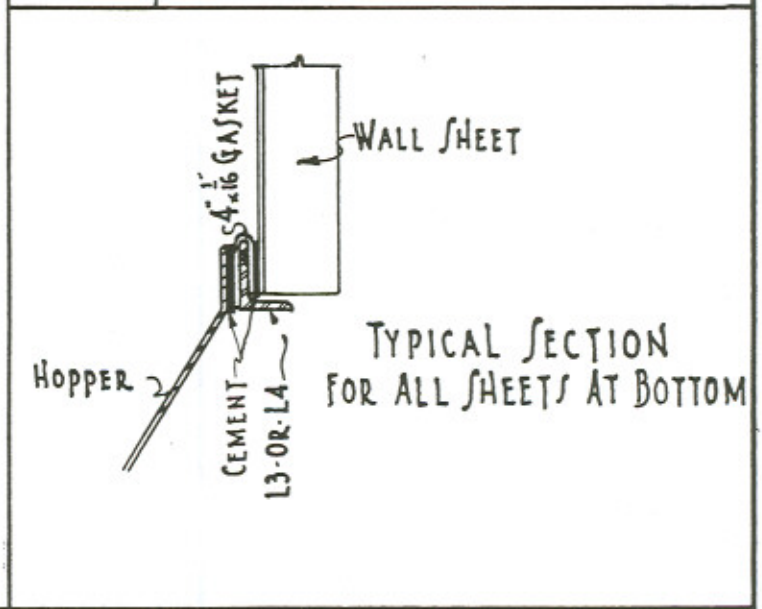

THE W.W. SLY MANUFACTURING CO., CLEVELAND, O.	3-13-39	SK-2760-A

SALES AND ENGINEERING DATA

TITLE

SLY DUST FILTERS
ASSEMBLY OF INSIDE BRACES

ASSEMBLE END CHANNELS F-15-A & F-16-A - TO SUIT LOCATION OF SHAKER DRIVE.
BOLT F-16-A TO END SHEET AT SHAKER DRIVE END & 15-A AT OPPOSITE END.
FOR FILTERS WITH TWO SHAKER DRIVES - USE F-16-A AT BOTH ENDS

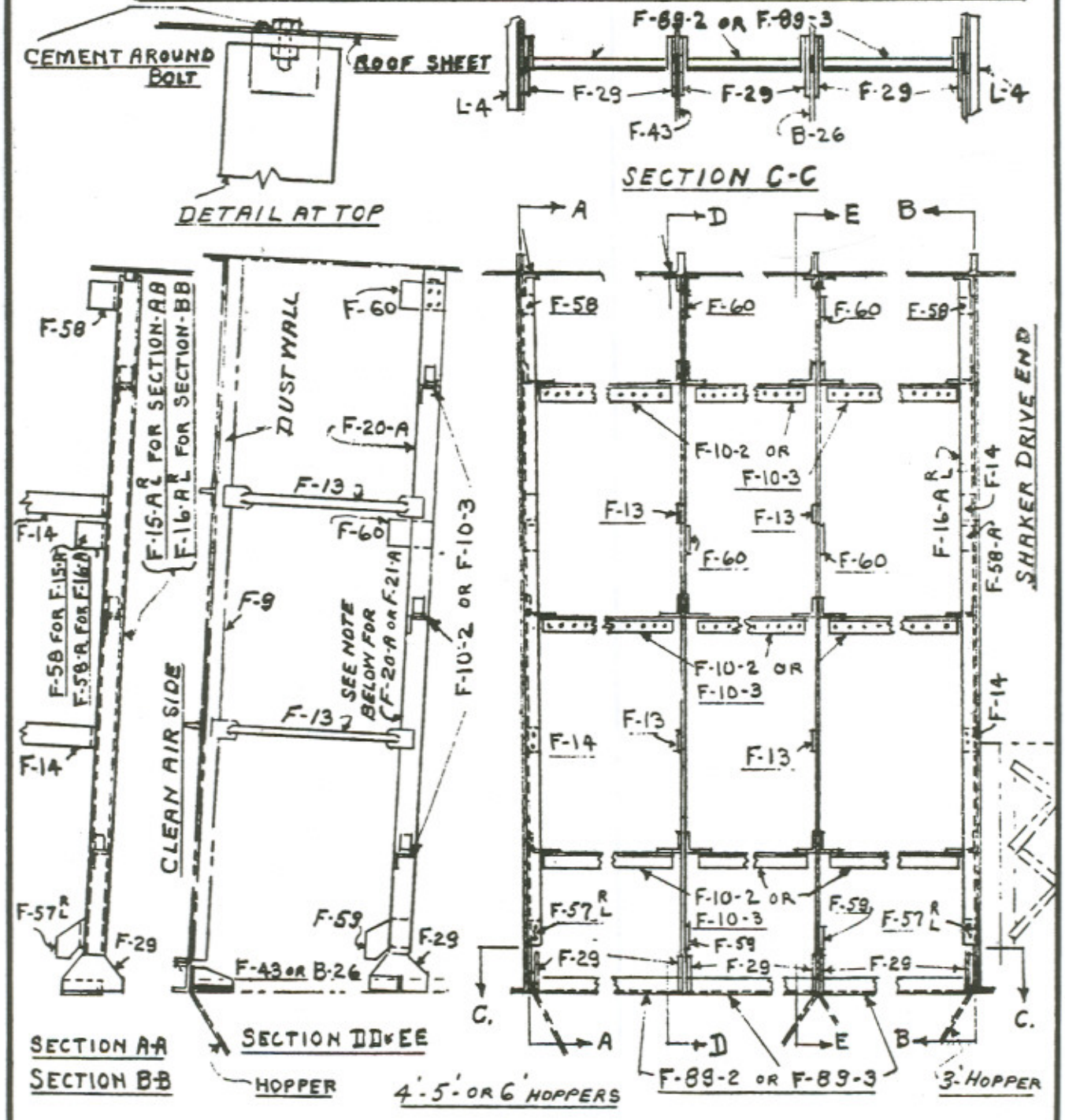

NOTE - FOR LOCATION OF INTERMEDIATE BRACE F-21-A - SEE INSTRUCTIONS -
THIS BRACE IS USED IN FILTERS OVER 12'-0" LONG ONLY.

THE W. W. SLY MANUFACTURING CO. CLEVELAND, OHIO	DATE 3-4-43	NO. SK.4708

SALES AND ENGINEERING DATA

TITLE

DUST WALL ASSEMBLY — TYPE "EE" DUST FILTER

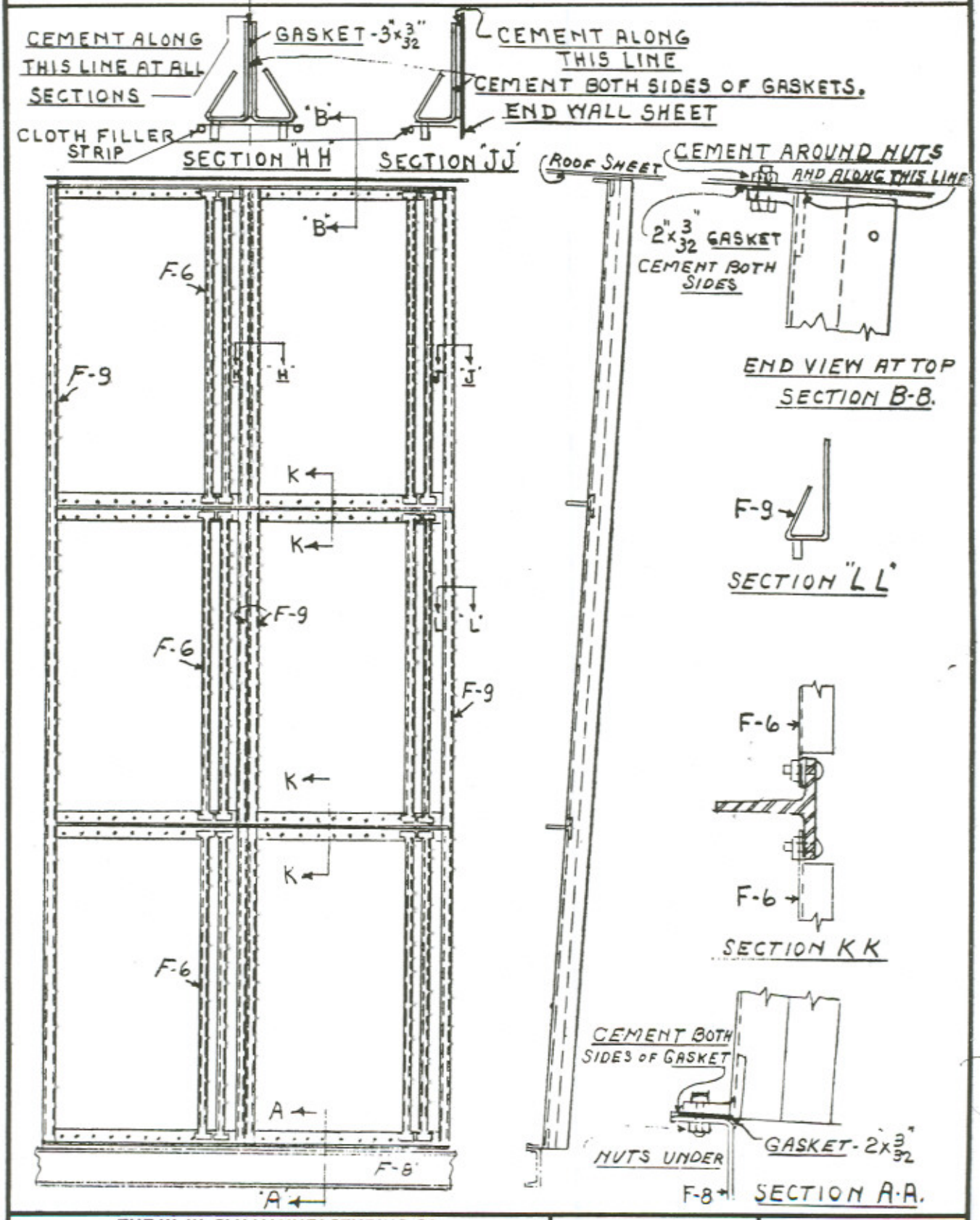

THE W. W. SLY MANUFACTURING CO.
CLEVELAND, OHIO

DATE 3-3-43

NO. SK-4709

SALES AND ENGINEERING DATA

TITLE

ASSEMBLY OF TYPE "EE" DUST FILTER

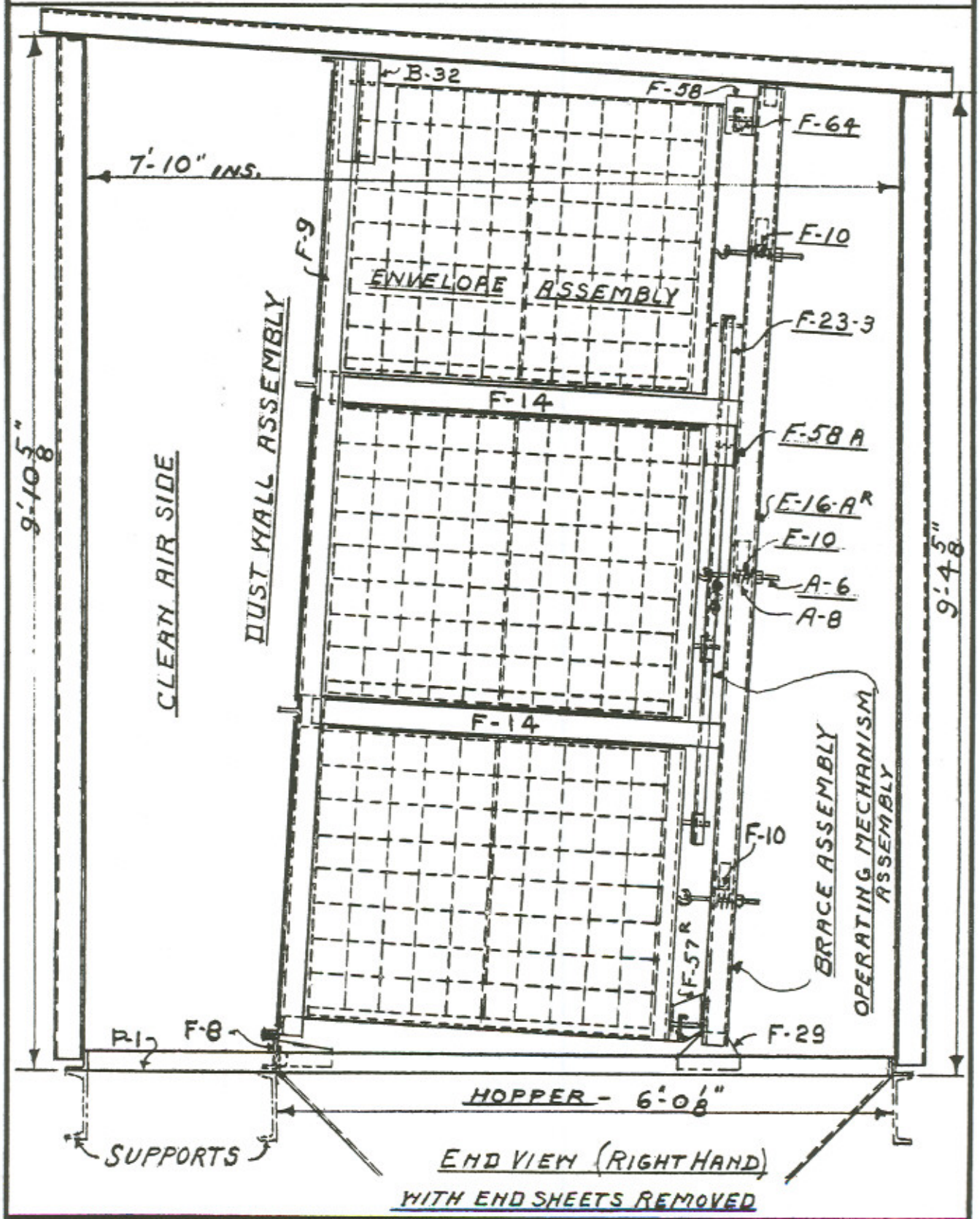

THE W. W. SLY MANUFACTURING CO.
CLEVELAND, OHIO

DATE 3-1-43

NO. SK-4710

SALES AND ENGINEERING DATA

TITLE

F-64 ADJUSTMENT

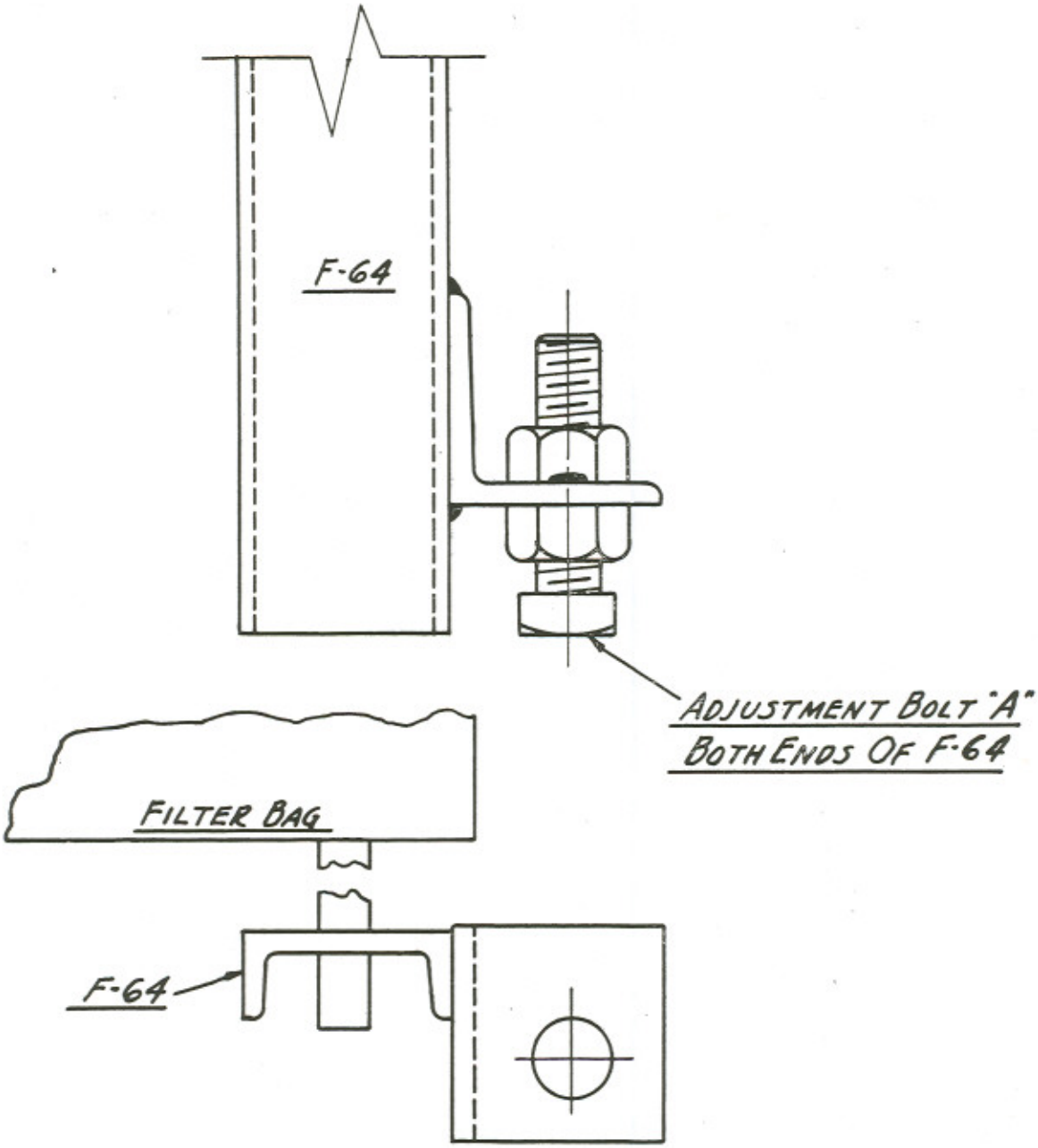

BOLT "A" CAN BE ADJUSTED AT EACH END TO EQUALIZE THE ACTION OF F-64. FOR A STICKY MATERIAL, OR MATERIAL WHICH IS HARD TO REMOVE FROM THE CLOTH, THE BUMPING FORCE CAN ALSO BE INCREASED BY THIS ADJUSTMENT.

THE W. W. SLY MANUFACTURING CO.
CLEVELAND, OHIO

R.J. | DATE 11-11-44 | NO. SK-5021

SALES AND ENGINEERING DATA

TITLE

CLEANING DEVICE DRIVE & HOUSING
TYPE EE DUST FILTER

SHAKER DRIVE - TYPE "EE"

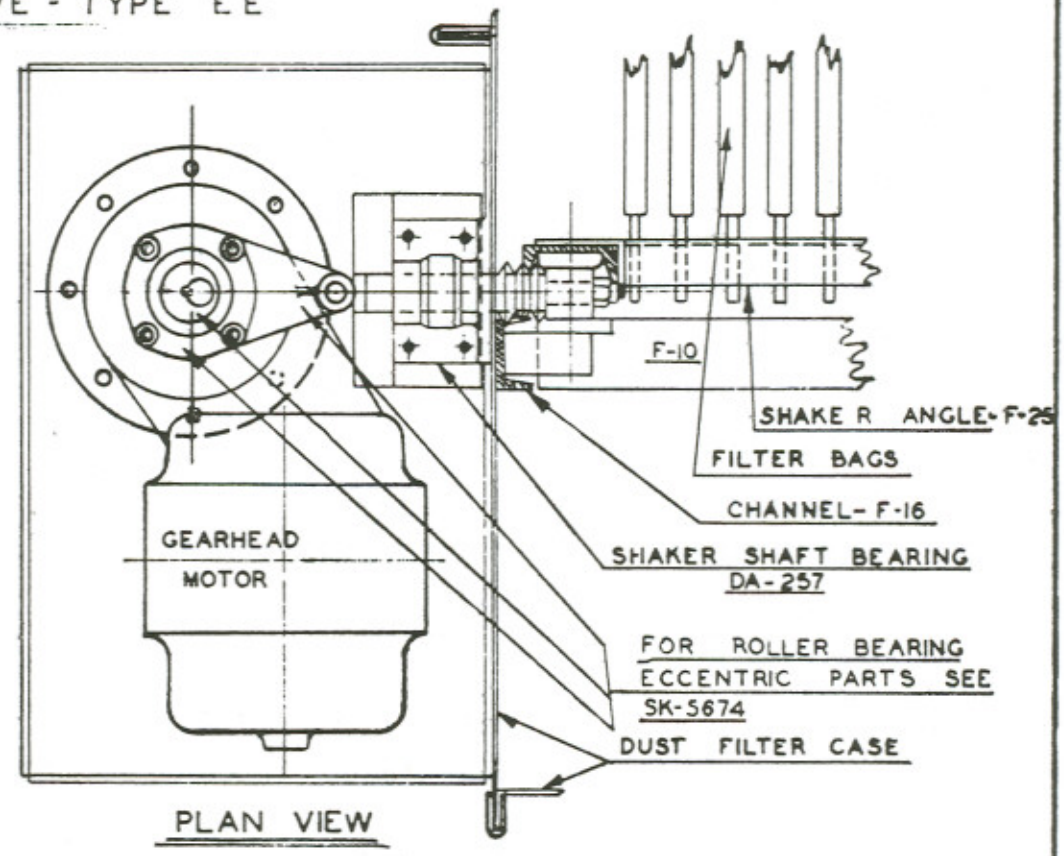

PLAN VIEW

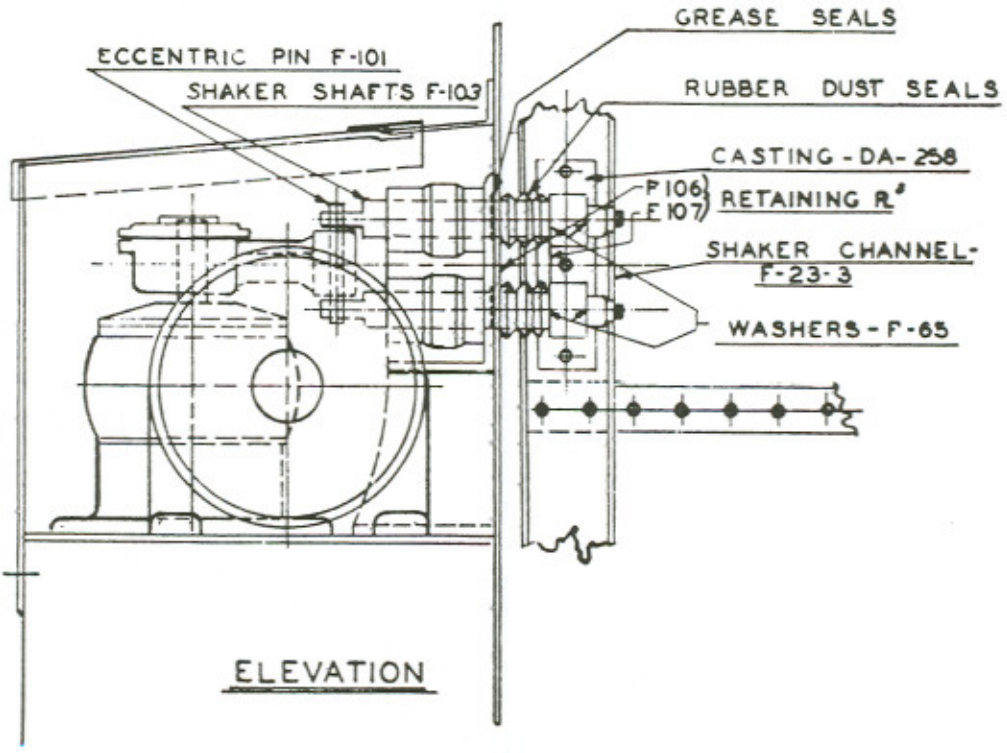

ELEVATION

THE W. W. SLY MANUFACTURING CO
CLEVELAND OHIO

DATE 10-3-50

NO. SK-4711

SALES AND ENGINEERING DATA

TITLE

OPERATING MECHANISM ASSEMBLY
R.H. SHOWN

TYPE "EE"
DUST FILTER

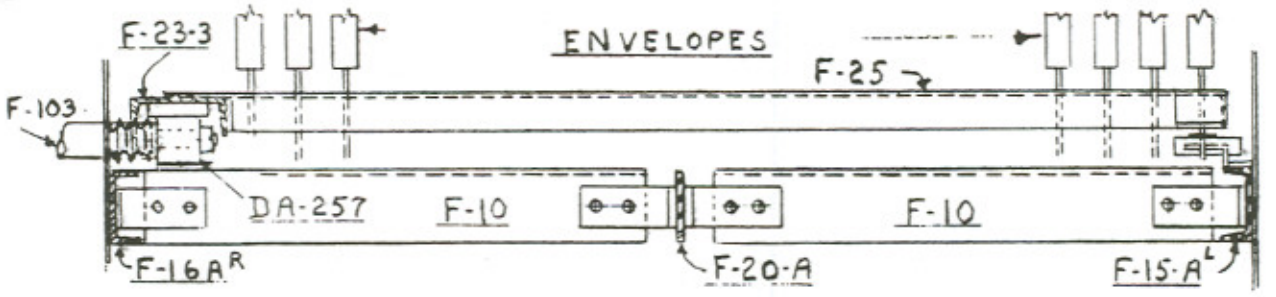

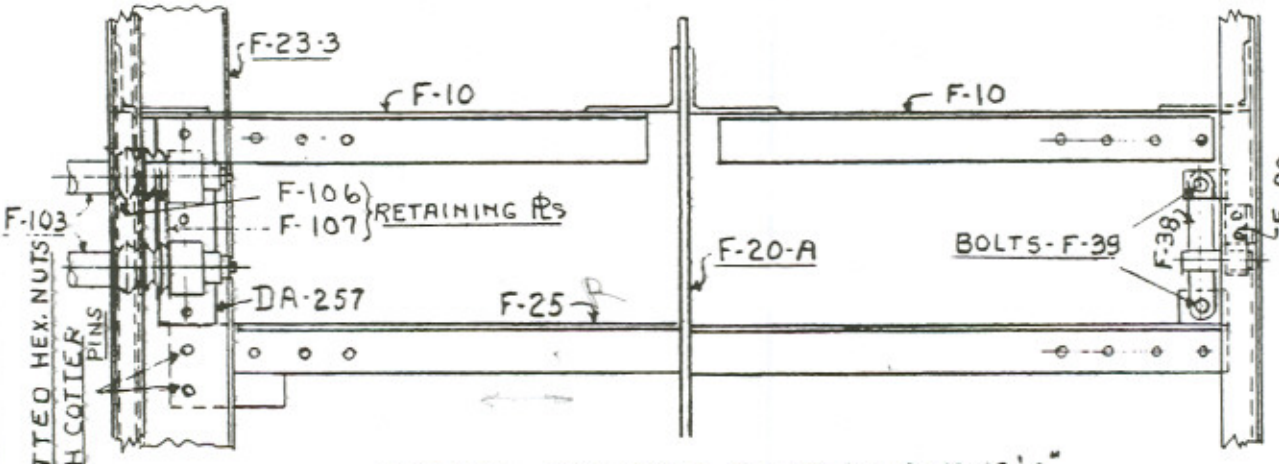

TYPICAL FOR DUST FILTERS UP TO 12'-0"

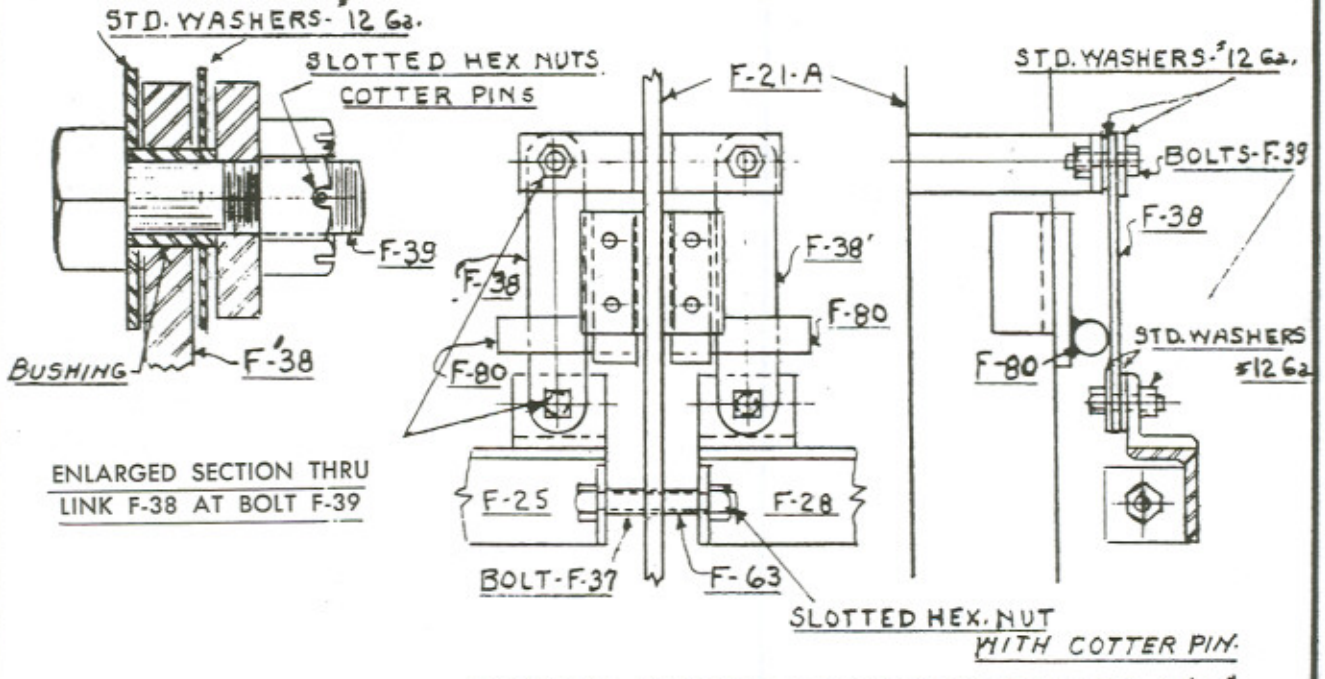

ENLARGED SECTION THRU
LINK F-38 AT BOLT F-39

TYPICAL SPLICE FOR DUST FILTERS OVER 12'-0"

THE W. W. SLY MANUFACTURING CO. CLEVELAND, OHIO	DATE 3-3-43	NO. SK.4712

SALES AND ENGINEERING DATA

TITLE

ASSEMBLY OF SEAL ℄. TO DUST WALL & BUMPERS TO ENVELOPES
TYPE EE DUST FILTER

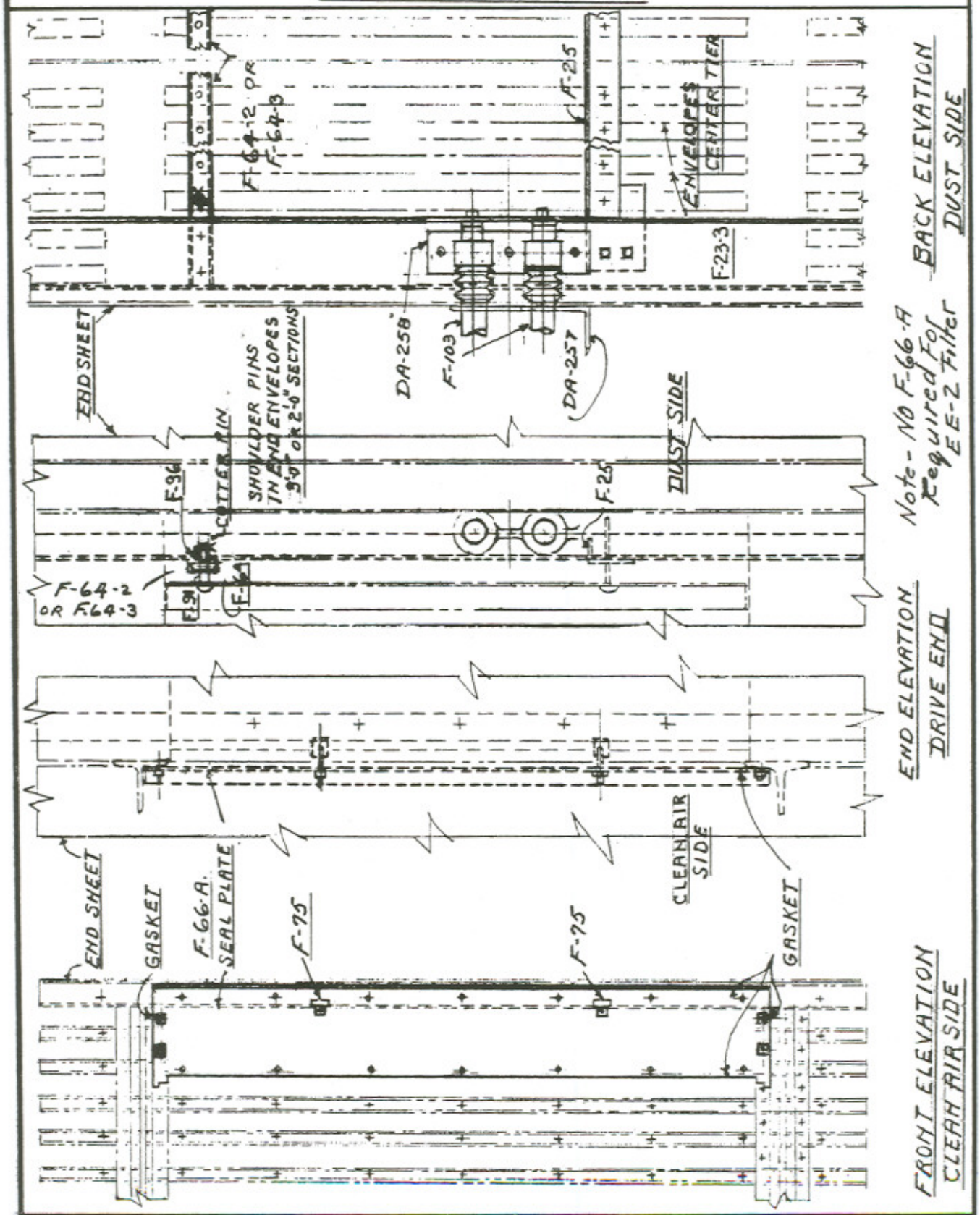

THE W. W. SLY MANUFACTURING CO.
CLEVELAND, OHIO

DATE 3-1-43

NO. SK-4713

SALES AND ENGINEERING DATA

TITLE

BAG ASSEMBLY TYPE-ED-EE AND UNIT FILTER

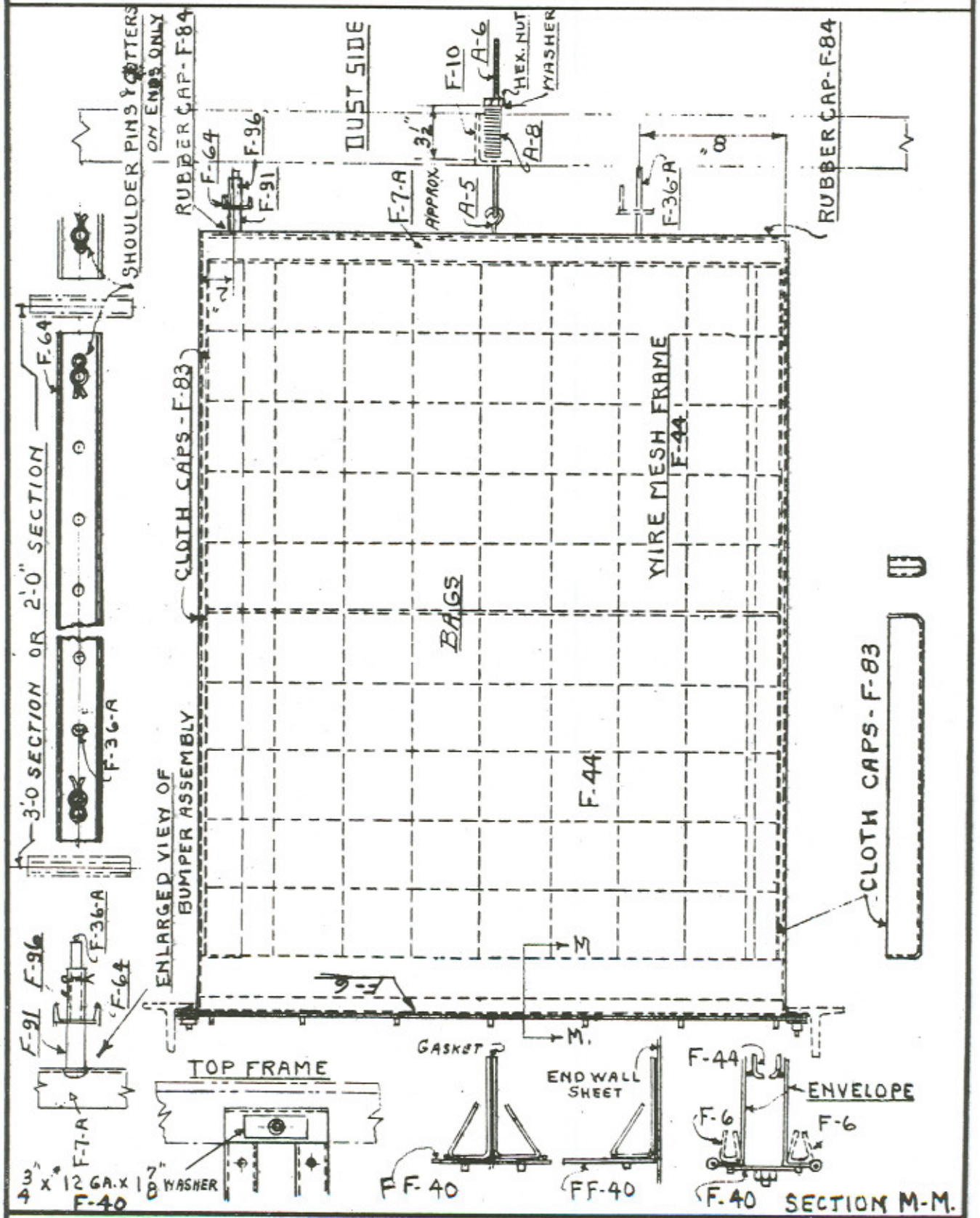

THE W. W. SLY MANUFACTURING CO.
CLEVELAND, OHIO

DATE

NO. SK-4714

SALES AND ENGINEERING DATA

TITLE

DIAGRAM BAFFLE ASSEMBLY

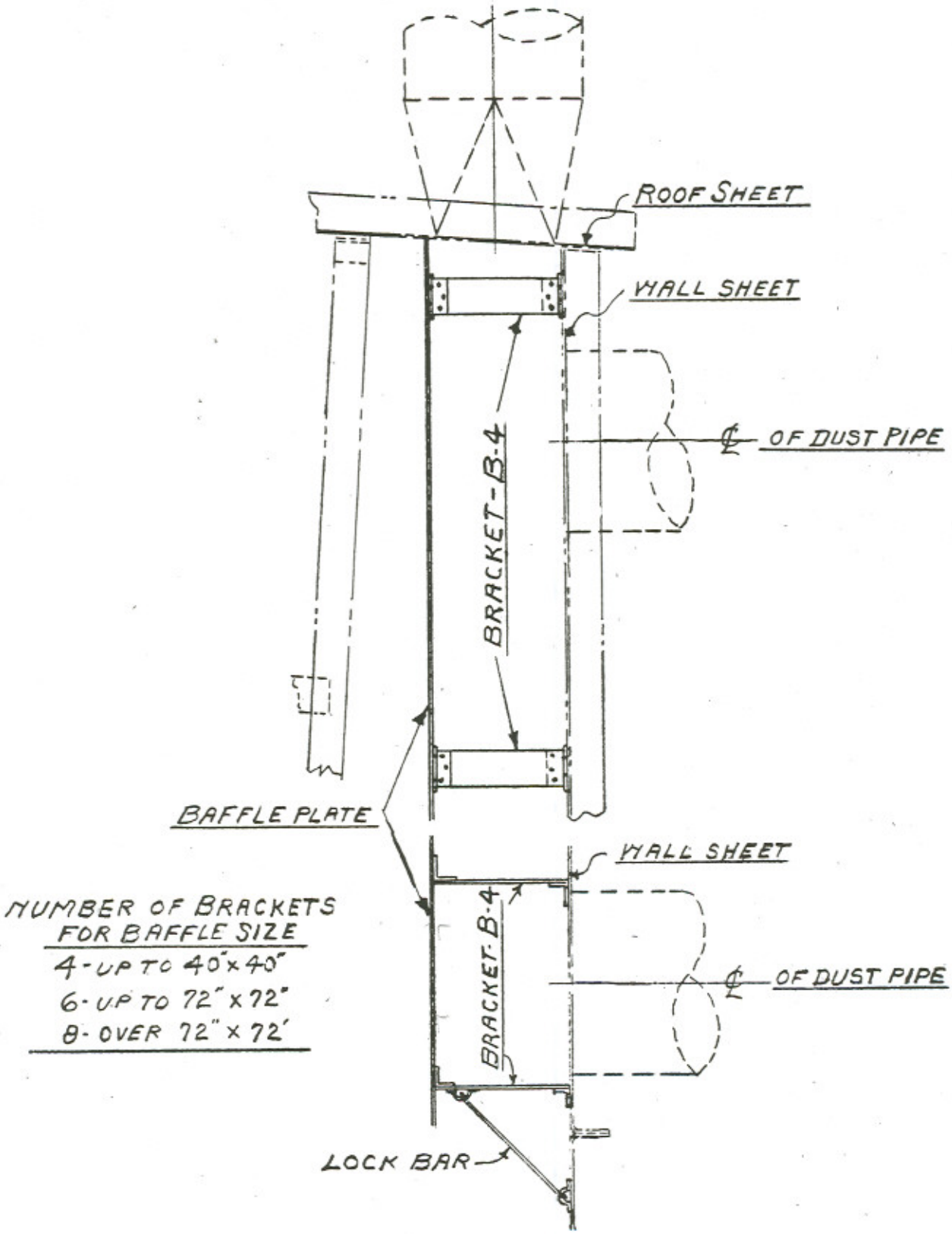

NUMBER OF BRACKETS FOR BAFFLE SIZE

4 - UP TO 40" x 40"
6 - UP TO 72" x 72"
8 - OVER 72" x 72'

THE W. W. SLY MANUFACTURING CO. CLEVELAND, OHIO	DATE 3-4-43	NO. SK.4715

SALES AND ENGINEERING DATA

TITLE SLY DUST FILTERS 8" DUST VALVES

USE ON ORDERS PREVIOUS TO H-745

HAND OPERATED DUST VALVE

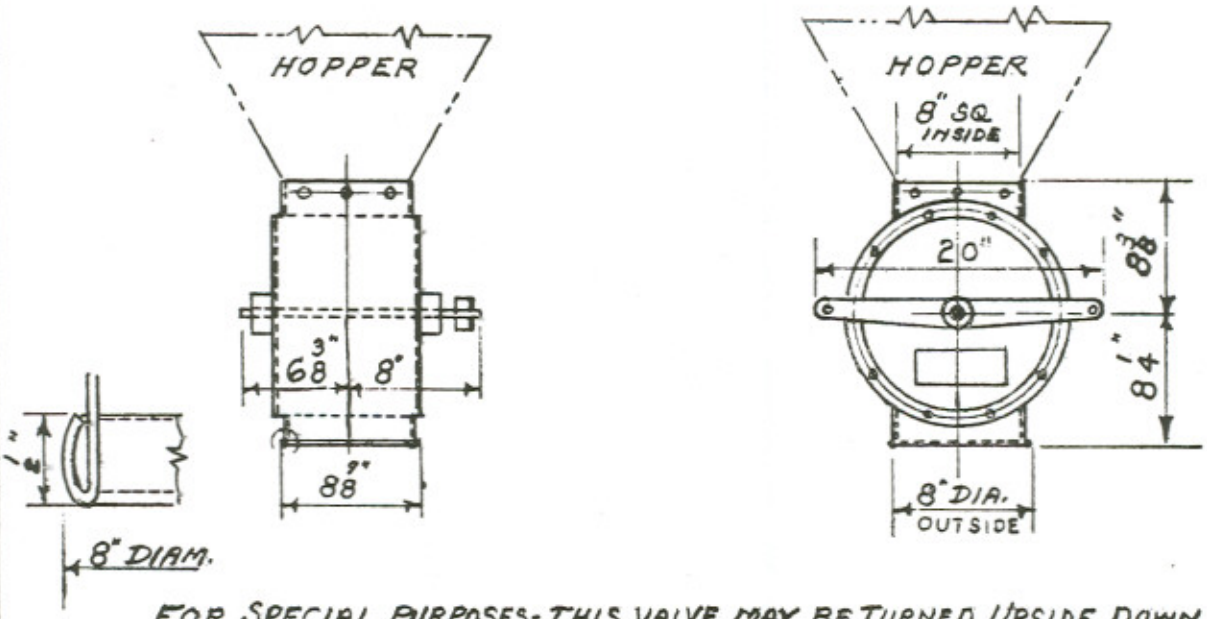

FOR SPECIAL PURPOSES-THIS VALVE MAY BE TURNED UPSIDE DOWN SO THAT ROUND OPENING CONNECTS TO HOPPER

CONTINUOUS DUST VALVE WITH HOPPER RAPPER

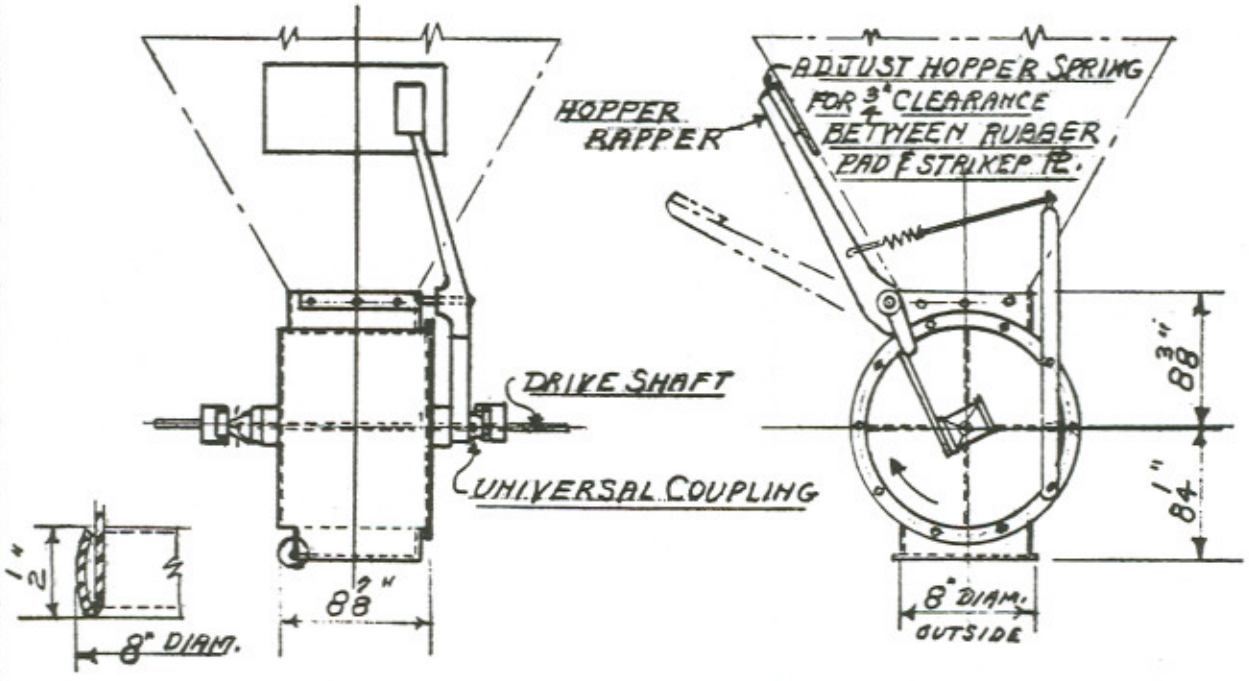

THE W. W. SLY MANUFACTURING CO. CLEVELAND, OHIO | DATE 3-8-43 | NO. SK-4717

SALES AND ENGINEERING DATA

TITLE SLY DUST FILTER 8" HOPPER VALVE

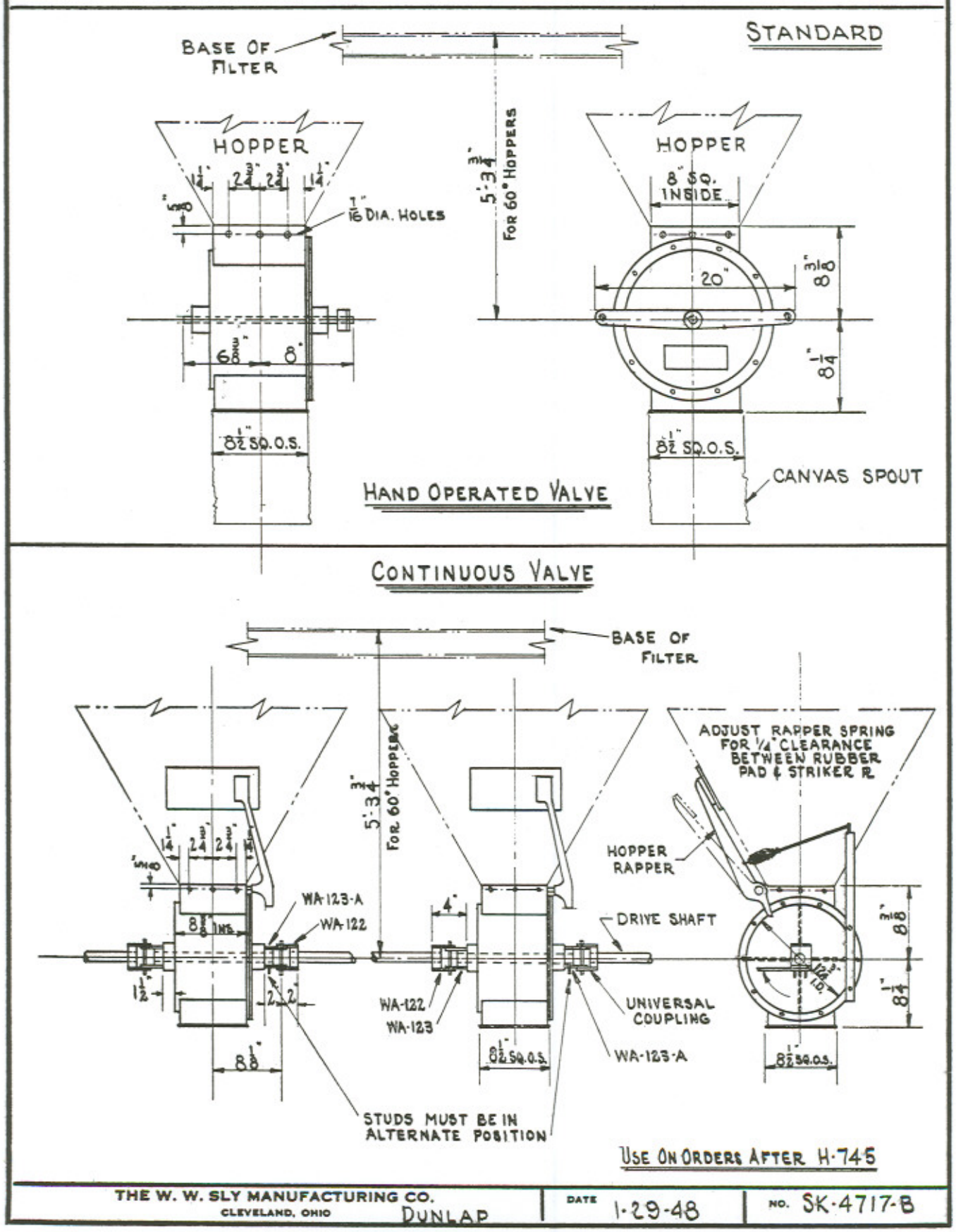

USE ON ORDERS AFTER H-745

THE W. W. SLY MANUFACTURING CO.
CLEVELAND, OHIO

DUNLAP

DATE 1-29-48

NO. SK-4717-B

SALES AND ENGINEERING DATA

TITLE

CONTINUOUS VALVE PARTS

USE ON ORDERS PREVIOUS TO H-745

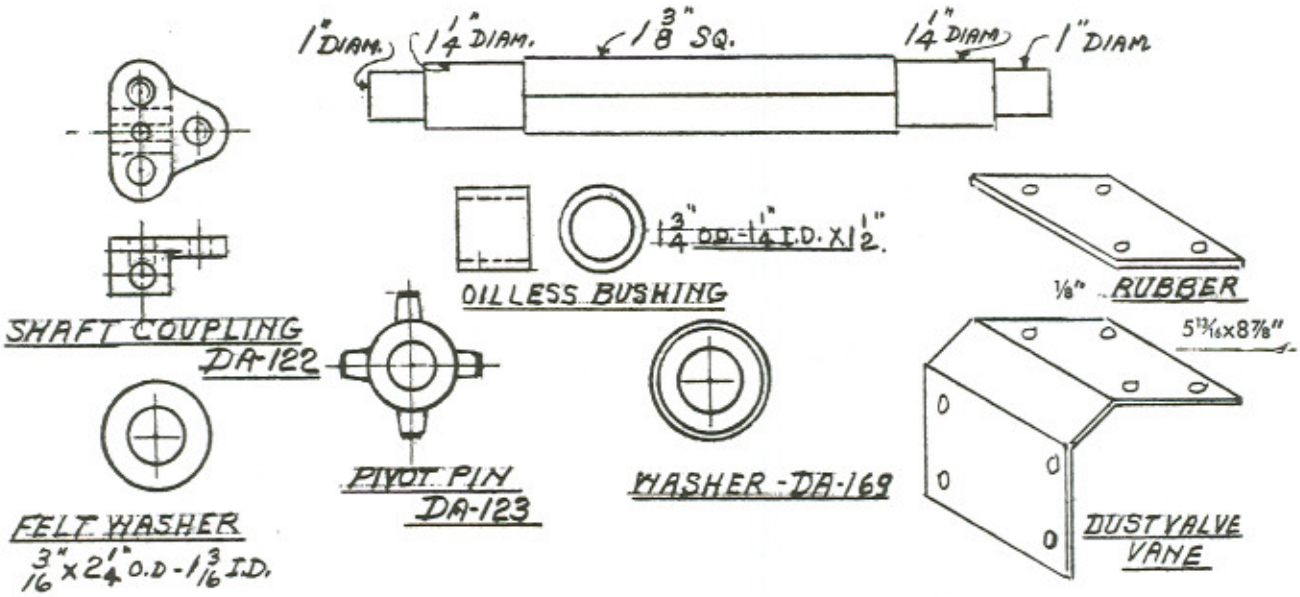

HOPPER RAPPER PARTS

(TYPE C)

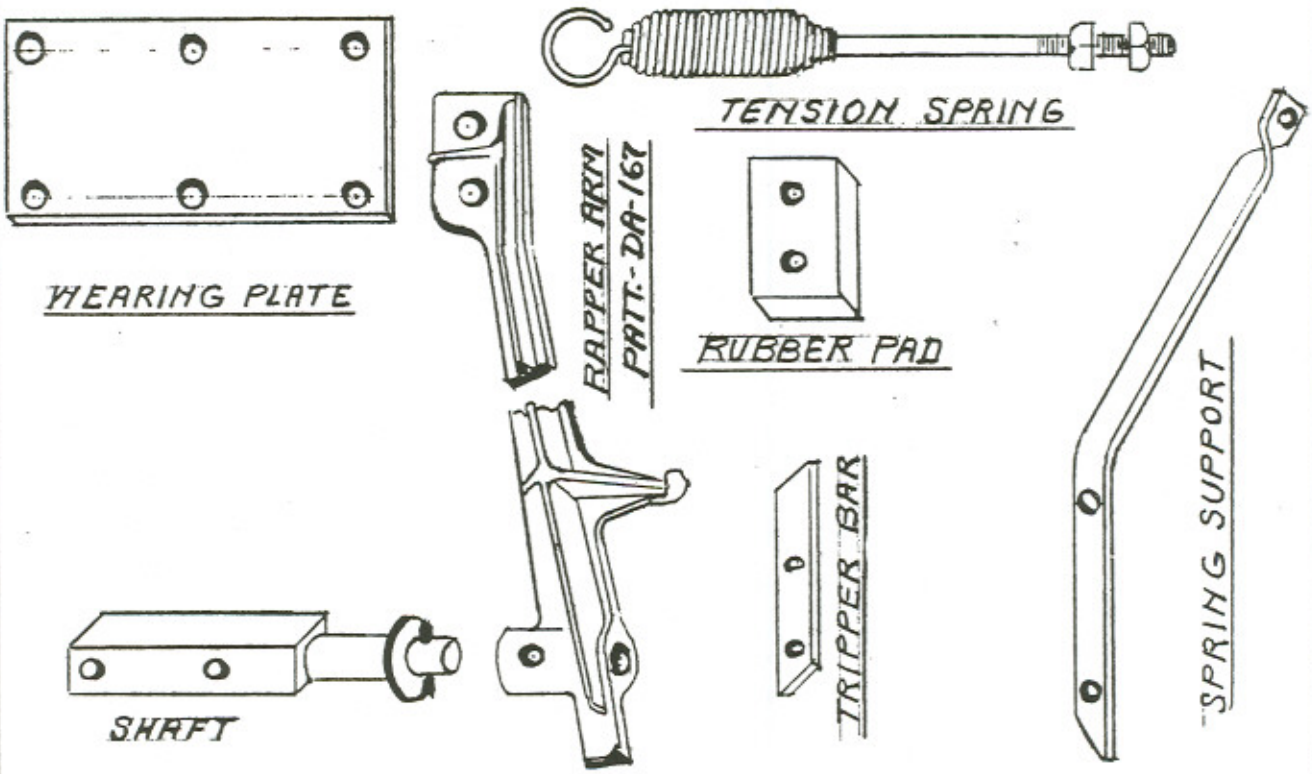

THE W. W. SLY MANUFACTURING CO.
CLEVELAND, OHIO

DATE 3-8-43

NO. SK-4718

SALES AND ENGINEERING DATA

TITLE

8" CONTINUOUS VALVE PARTS

USE ON ORDERS AFTER H-745

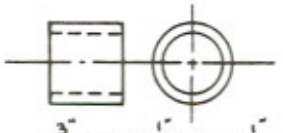

$1\frac{3}{4}$" O.D. - $1\frac{1}{4}$" I.D. x $1\frac{1}{2}$"
OILLESS BUSHING

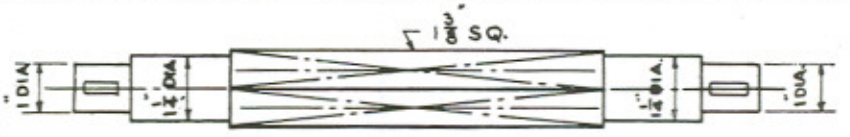

VALVE SHAFT S-1

$3/16$" x $2\frac{1}{4}$" O.D. - $1\frac{3}{16}$" I.D.
FELT WASHER

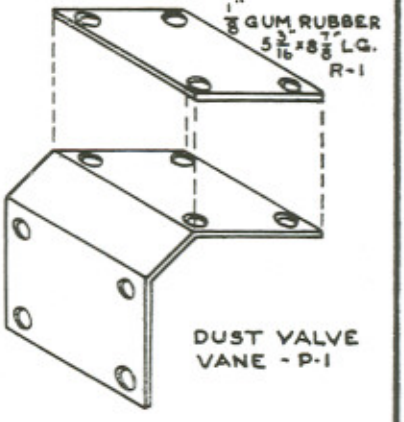

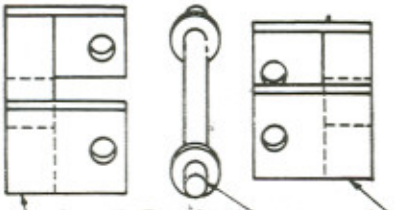

WA-122 PIVOT PIN SS-1 WA-123
WELDED COUPLING

WASHER D.A-169

DUST VALVE
VANE - P-1

NOTE:
WA-123-A HAS STUDS FOR RAPPER

HOPPER RAPPER PARTS

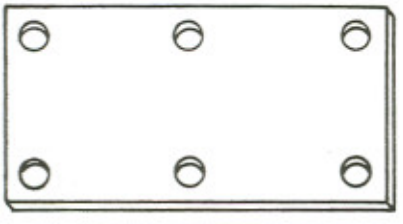

WEARING PL P-1

TENSION SPRING

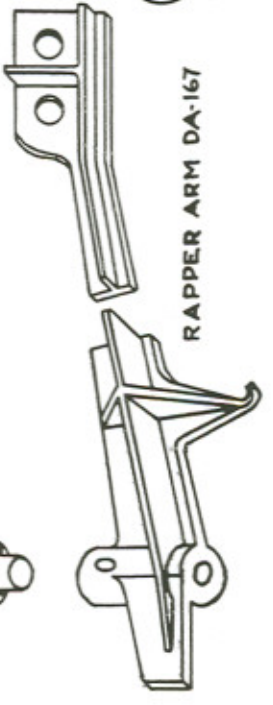

RAPPER ARM DA-167

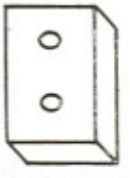

RUBBER PAD

TRIPPER BAR B-2

SPRING SUPPORT B-3

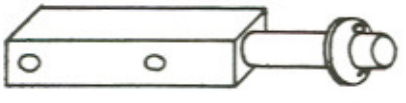

SHAFT S-1

THE W. W. SLY MANUFACTURING CO. CLEVELAND, OHIO	DATE 8-22-47	NO. SK 4718-A

SALES AND ENGINEERING DATA

SLY DUST FILTERS

LOCATION OF BAFFLE PLATES

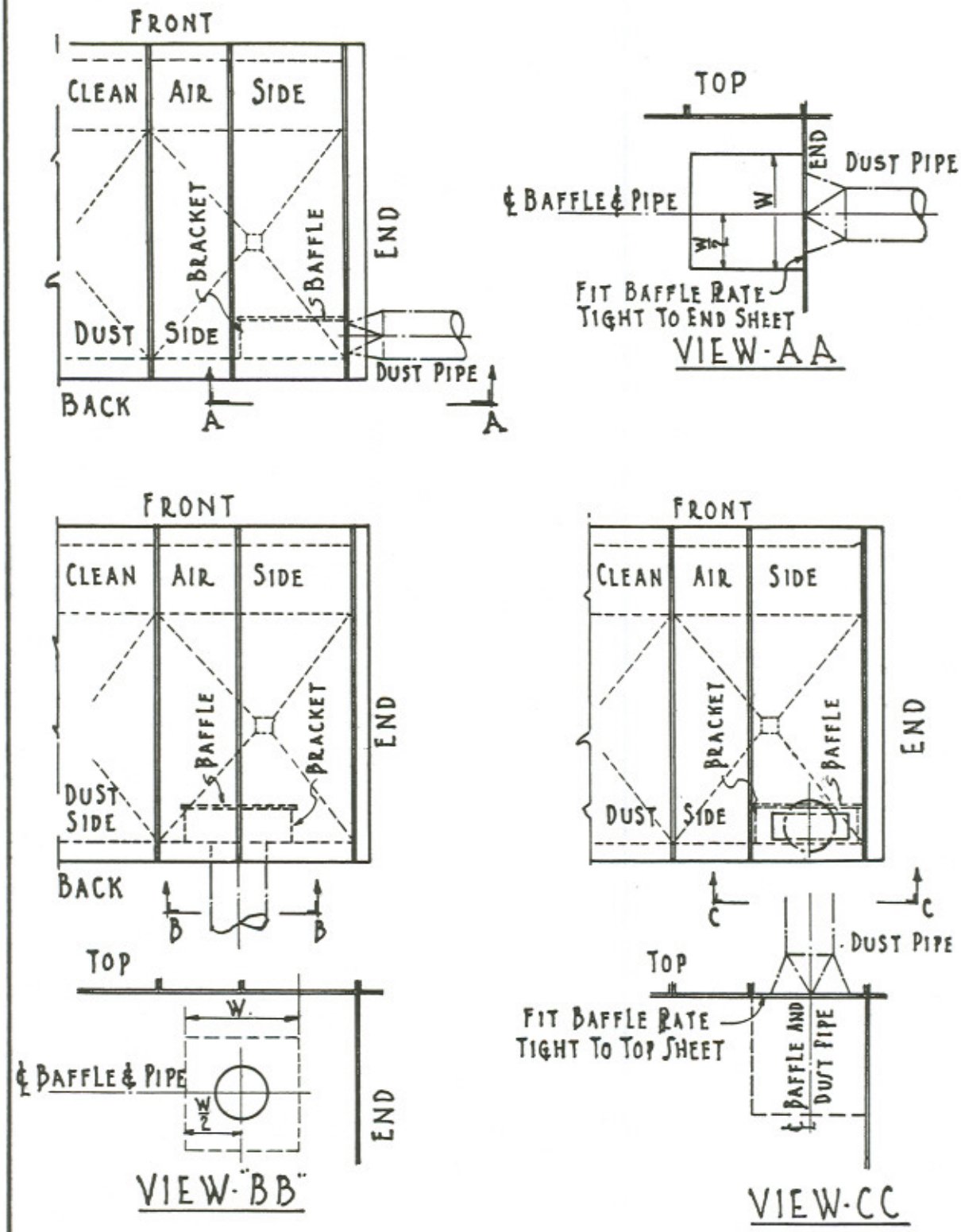

THE W.W.SLY MANUFACTURING CO, CLEVELAND, O.	3-13-39	SK-3800

TITLE
SLY DUST FILTERS

DUST PIPING

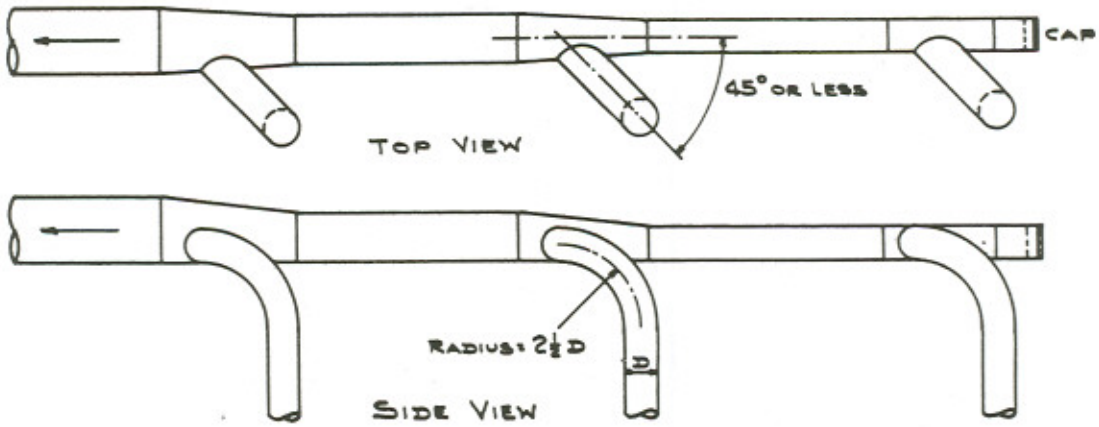

Main Dust Pipe with Branches

PIPING SPECIFICATIONS

Main dust pipe should be constructed as shown, keeping bottom of the pipe straight throughout its entire length, changing area at inlets with cone tapering in on top and sides only.

Joints should be lapped in direction of air travel. Branch pipes to enter main on sides at an angle not to exceed 45 degrees.

Pipes should be substantially supported throughout their entire length.

Cleanout openings to be in lower side of pipe and covered by sleeves.

Cleanouts should be placed approximately 10 feet apart in run of pipe. Dead end cleanouts to have removable caps with handles.

Bends to have a radius on the center line of not less than 2½ times the diameter of the pipe.

Risers should be provided with blast gates to regulate the air velocity through the pipes.

Pipes should be galvanized iron, all joints riveted and soldered, and of not less than the following gauges:

Up to 8″ diameter inclusive.....20 gauge
9″ to 18″ diameter inclusive.....18 gauge
19″ to 30″ diameter inclusive.....16 gauge
31″ diameter and over.....14 gauge

All elbows and bends shall be made from material at least 2 gauges heavier than is required for straight piping of the same diameter, except for No. 14 gauge and heavier, elbows and straight pipe may be of the same gauge.

Pipe between clean-air chamber of dust filter and inlet of exhaust fan should always be the same size as the fan inlet and should be provided with a blast gate.

For severe conditions, when dust is extremely abrasive, pipe of welded steel construction with flanged joints is recommended.

Hoods at sources of dust should be well constructed of heavy gauge galvanized iron with all sharp edges turned under. Extra large hoods should be of welded construction, reinforced with bar iron or angles, to be able to stand abuse and not become distorted.

We are prepared to make piping layouts and design hoods for any dust collecting system, and can furnish and install complete duct work and hoods.

PIPING SPECIFICATIONS ARE IN ACCORDANCE WITH THE AMERICAN FOUNDRYMEN'S ASSOCIATION STANDARDS, AND THE NEW YORK STATE FOUNDRY CODE.